Te Kaunihera o Te Hiku o te Ika
Far North District Council

Office Use Only
Application Number:

Application for change or cancellation of resource consent condition (S.127)

(Or Associated Consent Pursuant to the Resource Management Act 1991 (RMA)) Prior to, and during, completion of this application form, please refer to Resource Consent Guidance Notes and Schedule of Fees and Charges — both available on the Council's web page.

1. Pre-Lodgement Meeting

Have you met with a council Resource Consent representative to discuss this application prior to lodgement?
○ Yes ✔ No

If yes, who have you spoken with? _____

2. Type of Consent being applied for

● **Change of conditions (s.127)**

3. Consultation:

Have you consulted with Iwi/Hapū? ○ Yes ● No

If yes, which groups have you consulted with?

Who else have you consulted with?

For any questions or information regarding iwi/hapū consultation, please contact Te Hono at Far North District Council tehonosupport@fndc.govt.nz

4. Applicant Details:

Name/s: Traverse Limited

Email: [redacted]

Phone number: [redacted] Home

Postal address:
(or alternative method of service under section 352 of the act)

[redacted]
Postcode 0951

Office Use Only
Application Number:

5. Address for Correspondence

Name and address for service and correspondence (if using an Agent write their details here)

Name/s: David Johnson

Email: [redacted]

Phone number: [redacted]

Postal address:
(or alternative method of service under section 352 of the act) [redacted]

All correspondence will be sent by email in the first instance. Please advise us if you would prefer an alternative means of communication.

6. Details of Property Owner/s and Occupier/s

Name and Address of the Owner/Occupiers of the land to which this application relates (where there are multiple owners or occupiers please list on a separate sheet if required)

Name/s:

Property Address/ Location:

Postcode

7. Application Site Details

Location and/or property street address of the proposed activity:

Name/s: Traverse Limited

Site Address/ Location: [redacted]

Legal Description: [redacted]

Certificate of title: [redacted]

Please remember to attach a copy of your Certificate of Title to the application, along with relevant consent notices and/or easements and encumbrances (search copy must be less than 6 months old)

Site visit requirements:

Is there a locked gate or security system restricting access by Council staff? ◯ **Yes** ✔ **No**

Is there a dog on the property? ◯ **Yes** ✔ **No**

7. Application Site Details (continued)

Please provide details of any other entry restrictions that Council staff should be aware of, e.g. health and safety, caretaker's details.
This is important to avoid a wasted trip and having to re-arrange a second visit.

8. Detailed description of the proposal:

This application relates to the following resource consent: 220850-RMACOM

Specific conditions to which this application relates:

The conditions of the land use consent.

Describe the proposed changes:

To vary the conditions of 220850-RMACOM to allow vehicle crossings to be established on Lots 4 and 5 DP 596768 within 30m of the intersection of Te Uru Lane with Kerikeri Road.

9. Would you like to request Public Notification?

☐ **Yes** ☑ **No**

10. Other Consent required/being applied for under different legislation
(more than one circle can be ticked):

☑ **Building Consent** Enter BC ref # here (if known)
☐ **Regional Council Consent (ref # if known)** Ref # here (if known)
☐ **National Environmental Standard consent** Consent here (if known)
☐ **Other (please specify)** Specify 'other' here

11. Assessment of Environmental Effects:

Every application for resource consent must be accompanied by an Assessment of Environmental Effects (AEE). This is a requirement of Schedule 4 of the Resource Management Act 1991 and an application can be rejected if an adequate AEE is not provided. The information in an AEE must be specified in sufficient detail to satisfy the purpose for which it is required. Your AEE may include additional information such as Written Approvals from adjoining property owners, or affected parties (including consultation from iwi/hapū).

Your AEE is attached to this application ☑ **Yes**

12. Draft Conditions:

Do you wish to see the draft conditions prior to the release of the resource consent decision? ● **Yes** ○ **No**

If yes, do you agree to extend the processing timeframe pursuant to Section 37 of the Resource Management Act by 5 working days? ✔ **Yes** ○ **No**

13. Billing Details:

This identifies the person or entity that will be responsible for paying any invoices or receiving any refunds associated with processing this resource consent. Please also refer to Council's Fees and Charges Schedule.

Name/s: (please write in full) Traverse Limited, Kent Charles Fearon

Email: [redacted]

Phone number: [redacted]

Postal address:
(or alternative method of service under section 352 of the act) [redacted]

Fees Information:
An instalment fee for processing this application is payable at the time of lodgement and must accompany your application in order for it to be lodged. Please note that if the instalment fee is insufficient to cover the actual and reasonable costs of work undertaken to process the application you will be required to pay any additional costs. Invoiced amounts are payable by the 20th of the month following invoice date. You may also be required to make additional payments if your application requires notification.

Declaration concerning Payment of Fees:
I/we understand that the Council may charge me/us for all costs actually and reasonably incurred in processing this application. Subject to my/our rights under Sections 357B and 358 of the RMA, to object to any costs, I/we undertake to pay all and future processing costs incurred by the Council. Without limiting the Far North District Council's legal rights if any steps (including the use of debt collection agencies) are necessary to recover unpaid processing costs I/we agree to pay all costs of recovering those processing costs. If this application is made on behalf of a trust (private or family), a society (incorporated or unincorporated) or a company in signing this application I/we are binding the trust, society or company to pay all the above costs and guaranteeing to pay all the above costs in my/our personal capacity.

Name: (please write in full) Kent Fearon

Signature: (signature of bill payer) [redacted]

14. Important Information:

Note to applicant
You must include all information required by this form. The information must be specified in sufficient detail to satisfy the purpose for which it is required.
You must pay the charge payable to the consent authority for the resource consent application under the Resource Management Act 1991.

PrivacyInformation:
Once this application is lodged with the Council it becomes public information. Please advise Council if there is sensitive
information in the proposal. The information you have provided on this form is required so that your application for consent pursuant to the Resource Management Act 1991 can be processed under that Act. The information will be stored on a public register and held by the Far North District Council. The details of your application may also be made available to the public on the Council's website, www.fndc.govt.nz. These details are collected to inform the general public and community groups about all consents which have been issued through the Far North District Council.

Declaration
The information I have supplied withthis application is true and complete to the best of my knowledge.

Name: (please write in full) David Johnson

Signature: [redacted]

A signature is not required if the application is made by electronic means

Checklist (please tick if information is provided)

- ✔ Payment (cheques payable to Far North District Council)
- ○ Details of your consultation with Iwi and hapū
- ✔ A current Certificate of Title (Search Copy not more than 6 months old)
- ✔ Copies of any listed encumbrances, easements and/or consent notices relevant to the application
- ✔ Applicant / Agent / Property Owner / Bill Payer details provided
- ✔ Location of property and description of proposal
- ✔ Assessment of Environmental Effects
- ○ Written Approvals / correspondence from consulted parties
- ○ Reports from technical experts (if required)
- ○ Copies of other relevant consents associated with this application
- ✔ Location and Site plans (land use) AND/OR
- ✔ Location and Scheme Plan (subdivision)
- ○ Elevations / Floor plans
- ○ Topographical / contour plans

Please refer to chapter 4 (Standard Provisions) of the Operative District Plan for details of the information that must be provided with an application. This contains more helpful hints as to what information needs to be shown on plans.

16 July 2025

Far North District Council

Memorial Avenue

Private Bag 752

Kaikohe 0440

ref.16655.drj

To whom it may concern,

RE: APPLICATION PURSUANT TO SECTION 127 OF THE RESOURCE MANAGEMENT ACT (1991) FOR TRAVERSE LIMITED (2220850-RMACOM) – 373 AND 377 KERIKERI ROAD, KERIKERI

Summary

1. This is an application to vary the conditions of 2220850-RMACOM pursuant to Section 127 of the Resource Management Act 1991 (RMA).

Background

2. In November 2022, the Far North District Council (FNDC) granted resource consent to subdivide Lot 1 DP 25752 (NA692/358), Pt Lot 2 DP 86081 (NA93D/894), and Lot 1 DP 162472 (NA98A/89) into fifty-five (55) lots over four stages. The fifty-five (55) lots comprise forty-seven (47) residential lots, one drainage reserve, three access lots, two roads to vest, and two balance titles.

3. The four stages are as follows:

   - **Stage 1**: A boundary adjustment between the three existing titles (Lot 60, Lot 61 amalgamated with Lot 1 DP 162472, and Lot 62), and two right of way easements (shown as A and B) (Sheet 2).
   - **Stage 2**: A subdivision of Lot 62 Stage 1 creating twenty-four (24) vacant lots (Lots 1 – 22, 30, and 33), one drainage reserve (Lot 48), one access lot (Lot 49), one road to vest (Lot 50), and a balance lot (Lot 100) (Sheet 3).

- **Stage 3**: A subdivision of Lot 100 Stage 2 creating sixteen (16) vacant lots (Lots 23 – 29, 31, 32, and 34 – 40), a road to vest (Lot 51), and a balance lot (Lot 101) (Sheet 4).
- **Stage 4**: A subdivision of Lot 101 Stage 3 creating seven vacant lots (Lots 41 – 47) and two access lots (Lots 52 and 53) (Sheet 5).

4. New titles have been issued for Stages 1 and 2. Titles are yet to issue for Stages 3 and 4.

5. Copies of 220850-RMACOM, NA692/358, NA93D/894, and NA98A/89 are **enclosed**.

6. 220850-RMACOM was approved on the basis that any vehicle crossings would be established at the building consent stage as a permitted activity. Rule 15.1.6C.1.1(e)(iv) of the Operative Far North District Plan (OFNDP) requires a resource consent for any vehicle crossing constructed on a local road (Lot 50 Stage 2, Te Uru Lane) within 30m of an arterial or collector road (Kerikeri Road).

7. Lots 4 and 5 Stage 2 (Lots 4 and 5 DP 596768, RT 1156104, and RT 1156105 respectively) adjoin the new road to vest (Lot 50 Stage 2, Te Uru Lane) and Kerikeri Road. Due to their depth (30.62m and 25.36m respectively) vehicle crossings cannot be constructed as a permitted activity. Copies of RT 1156104 and RT 1156105 are **enclosed**.

8. The new owners of Lot 5 DP 596768 have applied for a building consent to establish a new residential unit. The new vehicle crossing will be constructed on Te Uru Lane 9m from its intersection with Kerikeri Road. A copy of the plans lodged with the FNDC is **enclosed**.

9. The building consent for Lot 5 DP 596768 has been placed on hold pending the issuing of a consent to allow a vehicle crossing to be established on Te Uru Lane within 30m of its intersection with Kerikeri Road. Any future building consent for Lot 4 DP 596768 will face the same issue.

The proposal

10. The proposal is to vary the conditions of 220850-RMACOM to allow vehicle crossings to be established on Lots 4 and 5 DP 596768 within 30m of the intersection of Te Uru Lane with Kerikeri Road. This will allow the building consent application for Lot 5 DP 596768 to be issued.

11. In order to facilitate the above, this application proposes to include an additional condition in the land use conditions as follows (deletions are shown as ~~strikethrough~~, while additions are shown as **bold** and underlined):

- *Landuse Consent – Earthworks* ***and Vehicle Crossings***

  Condition 6

  Prior to construction of a dwelling on Lots 4 and 5, the owner shall construct a vehicle crossing in accordance with the requirements of the Far North District Councils engineering standards and the Operative Far North District Plan except for Rule 15.1.6C.1.1(e)(iv) of the Operative Far North District Plan which requires vehicle crossings to be setback 30m from the intersection of a local road with an arterial road or a collector road. For the avoidance of doubt, any new vehicle crossings constructed on Lots 4 and 5 within 30m of the intersection of the road to vest (Lot 50) with Kerikeri Road will not require resource consent under Rule 15.1.6C.1.1(e)(iv) of the Operative Far North District Plan. Where a crossing is proposed onto a council road, a vehicle crossing permit approval is required from the council.

12. We note that consent notice condition 3(k)(i) of the subdivision consent requires any vehicle crossing to be constructed in accordance with the FNDC Engineering Standards. This is now registered on the titles of Lots 4 and 5 DP 596768 (RT 1156104 and RT 1156105) in Condition i of Consent Notice 12965271.5. A copy of Consent Notice 12965271.5 is **enclosed**. The FNDC Engineering Standards include minimum setbacks from intersections (see Section 3.2.27 and Table 3-15). Consent Notice 12965271.5 can be varied if the FNDC deems it necessary.

Legislative context

13. Section 127(3) of the RMA states that:

(3) Sections 88 to 121 apply, with all necessary modifications, as if—

a) the application was an application for a resource consent for a discretionary activity; and

b) the references to a resource consent and to the activity were references only to the change or cancellation of a condition and the effects of the change or cancellation respectively.

Effects on the environment

14. Section 127 of the RMA requires consideration of the environmental effects of the proposed changes. This assessment is confined to the adverse traffic effects associated with providing Lots 4 and 5 DP 596768 with vehicle crossings on Te Uru Lane within 30m of its intersection with Kerikeri Road.

Establishing vehicle crossings in close proximity to an intersection has the potential to adversely affect safety of vehicles exiting the site and those travelling on adjoining roads.

15. Vehicles travelling from Kerikeri Road will slow down to turn into Te Uru Lane. Vehicle speeds will reduce further to safely traverse the raised courtesy crossing at the entrance to Te Uru Lane. Vehicles exiting the subdivision will be travelling at slow speeds as they will have recently traversed the raised table and pedestrian crossing at the intersection of Te Uru Lane with the Stage 3 road to vest (Lot 51) and will be approaching the raised courtesy crossing at the entrance of Te Uru Lane. The slow speeds of vehicles entering and exiting the subdivision ensures that sufficient time is provided for drivers to see each other and react despite the proximity to the intersection.

16. Having considered the above, any adverse effects associated with the changes sought as part of this application will be less than minor.

Consistency with the relevant objectives and policies of the OFNDP

17. The objectives and policies of the Transport Chapter focus on minimising adverse traffic effects to promote a safe and efficient transport network for vehicles, cyclists, and pedestrians. Any adverse traffic effects associated with the proposed changes will be less than minor as any vehicles will be travelling at slow speeds past Lots 4 and 5 DP 596768. Establishing vehicle crossings within 30m of the intersection of Te Uru Lane and Kerikeri Road will not compromise the safety of the transport network for vehicles, pedestrians, and cyclists. Accordingly, the subdivision will remain consistent with the relevant OFNDP provisions, particularly the Transport Chapter, and the conclusions reached in the decision for 2220850-RMACOM with regards to objectives and policies remain relevant.

Objectives and policies from the PFNDP

18. The objectives and policies from the PFNDP are of no relevance to this application as Section 127(3)(b) of the RMA specifies that "references to a resource consent and to the activity were references only to the change or cancellation of a condition and the effects of the change or cancellation respectively." Council's consideration of this application under sections 88 to 121 of the RMA is therefore restricted to the proposed changes to the consent conditions. There is no requirement to assess the consented activity in the context of the objectives and policies of the PFNDP. Furthermore, the PFNDP has minimal

weight as it is still subject to a public hearing, a decision, and the potential appeals to the Environment Court. The objectives and policies from the PFNDP are not relevant to the proposal.

19. Notwithstanding the above, this application demonstrates that any adverse effects associated with the proposed changes will continue to be less than minor in accordance with the existing consent. This ensures that the development is consistent with any relevant objectives and policies from the PFNDP.

Notification

20. Section 127(4) of the RMA states that:

(4) For the purposes of determining who is adversely affected by the change or cancellation, the consent authority must consider, in particular, every person who—

a) made a submission on the original application; and

b) may be affected by the change or cancellation

21. With regards to s127(4)(a) and (b), the original application proceeded on a non-notified basis. No parties provided written approval to the proposal. Furthermore, any adverse effects associated with the proposed changes will be less than minor. Consequently, there are no adversely affected parties and the application can proceed on a **non-notified** basis.

Summary

22. This application seeks to vary the conditions of 2220850-RMACOM to allow vehicle crossings to be established on Lots 4 and 5 DP 596768 within 30m of the intersection of Te Uru Lane with Kerikeri Road. This will include the construction of the vehicle crossing to Lot 5 DP 596768 in the location shown on the building consent plans which are **enclosed** with this application.

23. Relative to the status quo, any adverse environmental effects associated with the proposed changes will be less than minor, and the proposal remains consistent with the relevant objectives and policies of the OFNDP. The objectives and policies of the PFNDP are not relevant to this application.

24. No parties are deemed to be affected by the proposed changes and therefore the proposal can proceed on a **non-notified** basis.

25. Having regard to the relevant matters in s127, s104(1), and s104B of the RMA, it is appropriate for this consent to be granted.

If you have any queries regarding this application, please do not hesitate to contact the undersigned.

Yours faithfully,

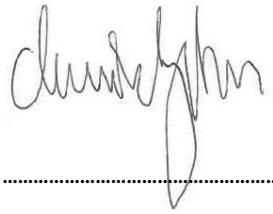

.....

David Johnson

Planner

Encl. 220850-RMACOM decision
220850-RMACOM approved plans
NA692/358
NA93D/894
NA98A/89
RT 1156104
RT 1156105
Lot 5 DP 596768 building consent plans
Consent Notice 12965271.5

Far North District Council

FAR NORTH DISTRICT COUNCIL

FAR NORTH OPERATIVE DISTRICT PLAN
DECISION ON RESOURCE CONSENT APPLICATION

Resource Consent Number: 2220850-RMACOM

Pursuant to Sections 104 and 104B of the Resource Management Act 1991 (the Act), the Far North District Council hereby grants resource consent to:

Traverse Limited

The activities to which this decision relates are listed below:

Subdivision to create 47 residential lots, drainage reserve and roads to vest, an allotment to be amalgamated with an adjoining title, and a balance lot. The development includes earthworks and construction of infrastructure over 4 stages.

Consent is sought under the National Environmental Standard for Assessing and Managing Contaminants in Soils to Protect Human Health Regulations 2011 ('NESCS') as a restricted discretionary activity.

Consent is sought to cancel water supply and right-of-way easements under Section 243(e) in Stages 1, 2, and 4 of the subdivision; and,

Consent is sought under Section 241(3) to cancel amalgamation conditions in Stages 3 and 4 of the subdivision.

Subject Site Details

Address:	373 and 377 Kerikeri Road, Kerikeri
Legal Description:	Lot 1 DP 25752, Pt Lot 2 DP 86081 and Lot 1 DP 162472

Pursuant to Sections 108 and 220 of the Act, this subdivision consent is issued subject to the following conditions:

<u>Subdivision Consent Stages 1 – 4</u>

Stage 1 – Lots 60, 61, and 62

1 That prior to certification under Section 223 of the Act:

a) The subdivision survey plan shall be in general accordance with the approved plan of subdivision Sheet 2 of 5 Revision F referenced as Stage 1 S16655 dated April 2022 prepared by Reyburn and Bryant Limited, attached to this consent with the Council's "Approved Stamp" affixed to it.

b) The survey plan shall show easements (both private and in gross where required) over the existing sewer lines serving Lot 62 and Lot 1 DP 162472.

c) Show the following amalgamation condition on the survey plan:
'That Lot 61 hereon be transferred to the owner of Lot 1 DP 162472 (RT:NA98A/89) and that one record of title be issued to include both parcels' (LINZ ref TBC)

d) Provide suitable evidence to show that easement B located over Lot 61 contains a formed and metalled 3.0 wide carriageway with suitable stormwater drainage for its length. Where the easement requires formation, confirmation that works are completed will be required by way of written certification from a chartered professional engineer or a suitably qualified professional (i.e. Surveyor as provided for under Appendix E of the Engineering Standards).

No conditions are required to be met prior to issuing of the Section 224 certificate.

Cancellation of Non-Conditional easement under Section 243(e)
Council resolves that, pursuant to Section 243(e) of the Resource Management Act, that the water right over Lot 1 DP 25725 & appurtenant to Pt Lot 2 DP 86081 (formerly Lot 2 DP 25725) & created by t.570871, is cancelled.

Stage 2 – Lots 1 – 22, 30, and 33 (residential lots), Lot 48 as reserve to vest, Lot 49 as common access lot, Lot 50 as road to vest, and Lot 100 as balance lot

2 That prior to certification under Section 223 of the Act:

a) The subdivision survey plan shall be in general accordance with the approved plan of subdivision Sheet 3 of 5 Revision F referenced as Stage 2 S16655 dated April 2022 prepared by Reyburn and Bryant Limited, attached to this consent with the Council's "Approved Stamp" affixed to it.

b) The survey plan shall show any easements required to protect existing service connections to the existing buildings on proposed Lots 1 and 2. Where those existing connections are to be removed and new connections installed as part of the civil works under this consent, no easements will be required.

c) Show the following amalgamation condition on the survey plan:
'That Lot 49 hereon (legal access) be held as to six undivided one-sixth shares by the owners of Lots 1, 2, 3 & 33 hereon (one share each) and Lot 100 hereon (two shares) as tenants in common in the said shares and that individual records of title be issued in accordance therewith.' (LINZ ref 1823275)

d) Submit to Councils Development Engineer or designate for approval, reports, plans, specifications & details of all works required to construct services and infrastructure prior to commencing construction of civil works. Such works shall be designed by a suitably qualified Chartered Professional Engineer or a suitably qualified professional (i.e. Surveyor as provided for under Appendix E of the Engineering Standards), in accordance with the Council's current Engineering Standards, NZS4404:2004, referencing the Engineering Reports produced by Hawthorn Geddes, Project reference 12546. In particular, the plans and details shall show:

i. The road to vest formed and sealed to comply with the Council standard for a Type B Urban Street with a 6.5m carriageway and (legal access) Lot 49. Plans must include (but is not limited to), road

pavement, pedestrian footpaths, cycle ways, street lighting, street furniture, road marking, traffic calming devices, road stormwater drainage and a suitably designed turning head.

ii. A streetlighting design for the new road to vest, internal accessways, and parking areas in accordance with the Northland Transportation Alliance Streetlight Design Manual.

iii. The intersection of Lot 50 as road to vest and Kerikeri Road to be formed and upgraded in accordance with Integrated Transport Assessment prepared by Hawthorn Geddes Limited dated 22 August 2022, and more specifically the details identified on the drawing entitled 'Proposed Turning Treatments' Figure No. 3 Rev. R2.

iv. Lot 49 as private common access lot is to be formed and sealed to comply with the Council standard with a minimum 5m kerbed carriageway for its length, inclusive of a complying crossing onto Lot 50.

v. Location of services within the carriageway (telecommunication, power)

vi. Connection details to the public wastewater reticulation network to serve Lots 1-15, Lots 16- 22, Lot 30 and 33. The reticulation shall be by gravity and pump station combination to the public gravity main on Mill Lane via Hall Road inclusive of any upgrades required, as offered by the applicant, in accordance with the requirements of the Far North District Councils Three Waters Asset Manager.

Note: Refer to Advice Notes 3 and 4 below.

vii. Connection details of onsite potable water supply system to serve Lots 1-22, Lot 30 and 33 in accordance with the Three Waters Assessment prepared by Hawthorn Geddes Limited dated 24 August 2022, and more specifically the details identified on the drawing entitled 'Potable Water Concept Plan' Figure No.6 Rev R2. The water supply must provide for water for firefighting in accordance with NZ Fire Service Fire Fighting Water Supplies Code of Practice SNZ PAS 4509:2008.

viii. Details of stormwater connections and mitigation in accordance with the Stormwater Management Report by Hawthorn Geddes Ref:12546 Rev 2 Dated 13th April 2022 to serve Lots 1-22, Lot 30 and 33, inclusive of design details addressing landscaping and finished contours for Lot 48 to vest.

Note: Refer to consent notice condition 3. l. v.

e) Submit a Construction Management Plan for approval by the Council. The plan shall contain information on, and site management procedures, for the following:

i. The timing of construction, including hours of work, key project and site management personnel (including Construction Engineer), and planned dated and duration of contract.

ii. The transportation of construction material from and to the site and associated controls on vehicles through sign-posted site entrance/exits and the loading and unloading of materials.
iii. Control of dust and noise on-site and any necessary avoidance or remedial measures.
iv. Prevention of earth and other material being deposited on surrounding roads from vehicles and remedial actions should it occur.
v. Publicity measures and safety measures, including signage, to inform adjacent landowners and occupiers, pedestrians and other users or Road if required.
vi. Erosion and sediment control measures to be in place for the duration of the works.
vii. A Traffic Management Plan where required.

All construction on the site is to be undertaken in accordance with the approved construction management plan.

f) Submit a pre-construction Road Safety Audit to be undertaken in general accordance with the 'Waka Kotahi Road Safety Audit Procedures for Projects – Guidelines' document, that identifies potential safety problems for all road users affected by the proposed development works associated with the intersection onto Kerikeri Road, including the needs of pedestrians, cyclists and elderly/disabled users and to ensure that measures to eliminate or reduce the problems are fully considered. Recommendations from the audit report shall be addressed and incorporated into the design as considered appropriate by the Councils Development Engineer or designate for approval.

g) Provide for Council approval a preferred road name and two alternatives for the road to vest and Lot 49. The applicant is advised that in accordance with Community Board policy, road names should reflect the history of the area.

3. That prior to issuing of a Section 224 certificate under the Act:

a) The Consent Holder shall ensure that the approved works specified in condition 2(d) above are constructed in accordance with the Councils Engineering Standards and Guidelines 2004 and the approved plans to the satisfaction of final inspection by the Development Engineer or designate.

b) Upon completion of the works specified in condition 2(d) above, provide certification by way of PS4 of the work from a chartered professional engineer or a suitably qualified professional (i.e. Surveyor as provided for under Appendix E of the Engineering Standards) that all work has been completed in accordance with the approved plans.

Note: All vested infrastructure/assets will require PS1 and PS4 from Chartered Professional Engineer. A suitably qualified professional can provide certificates for private assets if approved by Councils Engineer.

c) Upon completion of the works specified in condition 2(d) above, provide certification by way of PS3 from the road construction and drainage contractor that the vested road and three waters infrastructure is constructed in accordance with Councils Engineering Standards and Guidelines 2004 and approved plans.

d) Provide evidence that a maintenance agreement has been entered into with the contractor who is to maintain the work which is to vest in Council for a minimum period of 12 months. The minimum value of the bond, or retention money held in lieu of a bond, shall be 10% of the construction cost.

e) The Consent Holder shall provide to Council's development engineer or designate for approval, as-built plans for vested road, foot paths, storm water drainage, lighting, signage and marking complying with schedule 1D of NZS 4404:2004 and section 1.5.2.5 of Councils Engineering standards and guidelines and in RAAM format for the newly constructed section of road for inputting into the roading database.

f) Provide documentation that the service providers of electric power and telecommunications to the sites are satisfied with the arrangements made for the provision of these services to the boundary of all new allotments.

g) Provide confirmation from Councils maintenance contractor that the purchase and installation of the council approved road name sign/s for the road to vest and Lot 49 as per Condition 2. g) above is accepted and will be installed on the vesting of road to council. (i.e. paid invoice is sufficient).

h) Provide confirmation from a Licensed Cadastral Surveyor that the vested road and private common access lot and all reticulated assets are entirely within the appropriate easements and boundaries.

i) Provide evidence by way of a written statement from a suitably qualified and experienced person to confirm that the earth bund and landscape planting as shown on the plan prepared by Simon Cocker Landscape Architecture Limited entitled 'Landscape Mitigation Plan' dated 3rd June 2022 has been implemented and completed across the frontages of Lot 1 - 5, inclusive of the 1.5 metre high acoustic fence.

j) Submit a post-construction Road Safety Audit to be undertaken in general accordance with the 'Waka Kotahi Road Safety Audit Procedures for Projects – Guidelines' document, to the satisfaction of the Councils Development Engineer or designate for approval to address the finding and recommendations of the Audit required under Condition 2 f) above.

k) Pursuant to Section 221 of the Resource Management Act 1991, a consent notice must be prepared and be registered on the Computer Freehold Register of the specified lots at the consent holder's expense, containing the following conditions which are to be complied with on a continuing basis by the subdividing owner and subsequent owners:

   i. Lots 1 – 22, 30 and 33 - Prior to construction of a dwelling, the owner shall construct a vehicle crossing in accordance with Far North District Councils engineering standards. Where a crossing is proposed onto a council road, a vehicle crossing permit approval is required from the council.

   ii. Lots 2 – 5 shall not form nor utilise any vehicle crossing access onto Kerikeri Road.

iii. Lots 1 – 5 – The earth bund, fence and landscaping implemented under Condition 3. i) above in accordance with the plan prepared by Simon Cocker Landscape Architecture Limited entitled 'Landscape Mitigation Plan' dated 3rd June 2022 shall be maintained in perpetuity by the owners of Lots 1 – 5. A copy of the Plan shall be attached to this consent notice.

iv. Lots 1 – 22, 30 and 33 – Any development shall comply with the restrictions and recommendations identified in the Geotechnical Report for Proposed Subdivision prepared by Hawthorn Geddes Limited dated 28 February 2022.

v. Lots 1 – 22, 30 and 33 - At the time of lodgement of a building consent for a dwelling on the lots, the owner shall provide a design prepared by a suitably qualified professional for an on-site stormwater soakage pit capable of providing suitable soakage for rainfall events up to and included a 5 year Annual Return Interval. Overflows from the soakage pits are to be discharged via the reticulated stormwater network. Once approved, the soakage pit is to be constructed and maintained in accordance with the approved design.

Cancellation of Conditional easement under Section 243(e)
Council resolves that, pursuant to Section 243(e) of the Resource Management Act, the right of way marked 'A' on Stage 1 over Lot 62 Stage 1 is to be cancelled as it relates to Lot 60 Stage 1; and the right of way marked 'B' on Stage 1 over Lot 61 Stage 1 and appurtenant to Lot 60 Stage 1 and created on Stage 1 is cancelled.

Stage 3 – Lots 23 – 29, 31, 32, and 34-40 (residential lots), Lot 51 as road to vest, and Lot 101 as balance lot

4 That prior to certification under Section 223 of the Act:

a) The subdivision survey plan shall be in general accordance with the approved plan of subdivision Sheet 4 of 5 Revision F referenced as Stage 3 S16655 dated April 2022 prepared by Reyburn and Bryant Limited, attached to this consent with the Council's "Approved Stamp" affixed to it.

b) Show the following amalgamation condition on the survey plan:
'Redistribution of shares: That Lot 49 Stage 2 (legal access) be held as to two (existing) undivided one-sixth shares by the owners of Lot 101 hereon as tenants in common in the said shares and that individual records of title be issued in accordance therewith.' (LINZ ref 1823275)

c) Submit to Councils Development Engineer or designate for approval, reports, plans, specifications & details of all works required to construct services and infrastructure prior to commencing construction of civil works. Such works shall be designed by a suitably qualified Chartered Professional Engineer or a suitably qualified professional (i.e. Surveyor as provided for under Appendix E of the Engineering Standards) in accordance with the Council's current Engineering Standards, NZS4404:2004, referencing the Engineering Reports produced by

Hawthorn Geddes, Project reference 12546. In particular, the plans and details shall show:

i. The road to vest formed and sealed to comply with the Council standard for a Type A Urban street with a 6.0m carriageway. Plans must include (but is not limited to), road pavement, pedestrian footpaths, cycle ways, street lighting, street furniture, road marking, traffic calming devices, road stormwater drainage and a suitably designed turning head.

ii. A streetlighting design for the new road to vest, internal accessways, and parking areas in accordance with the Northland Transportation Alliance Streetlight Design Manual.

iii. Location of services within the carriageway (telecommunication, power)

iv. Connection details to the public wastewater reticulation network to serve Lots 23-29,31,32,34-40 in accordance with the requirements of the FNDC engineering standards and any recommendations from the Infrastructure & Asset Management department.

v. Connection details of onsite potable water supply system to serve Lots 23-29,31,32,34-40 in accordance with the Three Waters Assessment prepared by Hawthorn Geddes Limited dated 24 August 2022, and more specifically the details identified on the drawing entitled 'Potable Water Concept Plan' Figure No. 6 Rev R2. The water supply must provide for water for firefighting in accordance with NZ Fire Service Fire Fighting Water Supplies Code of Practice SNZ PAS 4509:2008.

vi. Details of stormwater connections and mitigation in accordance with the Stormwater Management report by Hawthorn Geddes Ref:12546 Rev 2 Dated 13th April 2022 to serve Lots 23-29,31,32,34-40

d) Submit a Construction Management Plan to be approved by the Council. The plan shall contain information on, and site management procedures, for the following:

i. The timing of construction, including hours of work, key project and site management personnel (including Construction Engineer), and planned dated and duration of contract.
ii. The transportation of construction material from and to the site and associated controls on vehicles through sign-posted site entrance/exits and the loading and unloading of materials.
iii. Control of dust and noise on-site and any necessary avoidance or remedial measures.
iv. Prevention of earth and other material being deposited on surrounding roads from vehicles and remedial actions should it occur.
v. Publicity measures and safety measures, including signage, to inform adjacent landowners and occupiers, pedestrians and other users or Road if required.
vi. Erosion and sediment control measures to be in place for the duration of the works.
vii. A Traffic Management Plan where required.

All construction on the site is to be undertaken in accordance with the approved construction management plan.

e) Provide for Council approval a preferred road name and two alternatives for the road to vest. The applicant is advised that in accordance with Community Board policy, road names should reflect the history of the area.

5. That prior to issuing of a Section 224 certificate under the Act:

a) The Consent Holder shall ensure that the approved works specified in condition 4(c) above are constructed in accordance with the Councils Engineering Standards and Guidelines 2004 and the approved plans to the satisfaction of final inspection by the Development Engineer or designate.

b) Upon completion of the works specified in condition 4(c) above, provide certification by way of PS4 of the work from a chartered professional engineer or a suitably qualified professional (i.e. Surveyor as provided for under Appendix E of the Engineering Standards)) that all work has been completed in accordance with the approved plans.

Note: All vested infrastructure/assets will require PS1 and PS4 from Chartered Professional Engineer. A suitably qualified professional can provide certificates for private assets if approved by Councils Engineer.

c) Upon completion of the works specified in condition 4(c) above, provide certification by way of PS3 from the road construction and drainage contractor that the vested road and three waters infrastructure is constructed in accordance with Councils Engineering Standards and Guidelines 2004 and approved plans.

d) The Consent Holder shall provide to Council's development engineer or designate for approval, as-built plans for vested road, foot paths, storm water drainage, lighting, signage and marking complying with schedule 1D of NZS 4404:2004 and section 1.5.2.5 of Councils Engineering standards and guidelines and in RAAM format for the newly constructed section of road for inputting into the roading database.

e) Provide evidence that a maintenance agreement has been entered into with the contractor who is to maintain the work which is to vest in Council for a minimum period of 12 months. The minimum value of the bond, or retention money held in lieu of a bond, shall be 10% of the construction cost.

f) Provide documentation that the service providers of electric power and telecommunications to the sites are satisfied with the arrangements made for the provision of these services to the boundary of all new allotments.

g) Provide confirmation from Councils maintenance contractor that the purchase and installation of the council approved road name sign for the road to vest as approved under Condition 4.e) above is accepted and will be installed on the vesting of road to council. (i.e. paid invoice is sufficient).

h) Provide confirmation from a Licensed Cadastral Surveyor that the vested road and private common access lot and all reticulated assets are entirely within the appropriate easements and boundaries.

i) Pursuant to Section 221 of the Resource Management Act 1991, a consent notice must be prepared and be registered on the Computer Freehold Register of the specified lots at the consent holder's expense, containing the following conditions which are to be complied with on a continuing basis by the subdividing owner and subsequent owners:

   i. Lots 23-29, 31, 32, 34 – 40, and 101 - Prior to construction of a dwelling, the owner shall construct a vehicle crossing in accordance with Far North District Councils engineering standards. Where a crossing is proposed onto a Council road, a vehicle crossing permit approval is required from the Council.

   ii. Lots 23 – 29, 31, 32, 34 – 40, and 101 – Any development shall comply with the restrictions and recommendations identified in the Geotechnical Report for Proposed Subdivision prepared by Hawthorn Geddes Limited dated 28 February 2022.

   iii. Lot 101 – Any future owner of Lot 101 is to be made aware that the location of any building and services is restricted to a 10 metre wide area within the lot. The subdivision consent inclusive of this lot has been granted on the basis that the subdivider accepts that any future development on Lot 101 may be restricted due to the configuration of the lot and that resource consent may be required to site any building and/or services.

   iv. Lots 23 – 29, 31, 32, 34 – 40, and 101 - At the time of lodgement of a building consent for a dwelling on the lots, the owner shall provide a design prepared by a suitably qualified professional for an on-site stormwater soakage pit capable of providing suitable soakage for rainfall events up to and included a 5 year Annual Return Interval. Overflows from the soakage pits are to be discharged via the reticulated stormwater network. Once approved, the soakage pit is to be constructed and maintained in accordance with the approved design.

Cancellation of Amalgamation Condition under Section 241(3)
Council resolves that, pursuant to Section 241(3) of the Resource Management Act, the amalgamation condition in relation to the two undivided one-sixth shares of Lot 49 Stage 2 (legal access) held by the owner of Lot 100 Stage 2 is cancelled.

Stage 4 – Lots 41 - 47 (residential lots) and Lot 52 and 53 as common access lot

6 That prior to certification under Section 223 of the Act:

a) The subdivision survey plan shall be in general accordance with the approved plan of subdivision Sheet 5 of 5 Revision F referenced as Stage 4 S16655 dated April 2022 prepared by Reyburn and Bryant Limited, attached to this consent with the Council's "Approved Stamp" affixed to it.

b) Show the following amalgamation conditions on the survey plan:
'Redistribution of shares: That Lot 49 stage 2 (legal access) be held as to two (existing) undivided one-sixth shares by the owners of Lots 46 & 47 hereon (one share each) as tenants in common in the said shares.'

‘That Lot 52 hereon (legal access) be held as to two undivided one-half shares by the owners of Lots 44 & 45 hereon (one share each) as tenants in common in the said shares.’

‘That Lot 53 hereon (legal access) be held as to two undivided one-half shares by the owners of Lots 42 & 43 hereon (one share each) as tenants in common in the said shares, and that individual records of title be issued in accordance therewith.’ (LINZ ref 1823275)

c) Submit to Councils Development Engineer or designate for approval, reports, plans, specifications & details of all works required to construct services and infrastructure prior to commencing construction of civil works. Such works shall be designed by a suitably qualified Chartered Professional Engineer or a suitably qualified professional (i.e. Surveyor as provided for under Appendix E of the Engineering Standards) in accordance with the Council’s current Engineering Standards, NZS4404:2004, referencing the Engineering Reports produced by Hawthorn Geddes, Project reference 12546. In particular, the plans and details shall show:

   i. Location of services within carriageway (telecommunication, power)

   ii. Connection details to the public wastewater reticulation network to serve Lots 41-47 in accordance with the requirements of the FNDC engineering standards and any recommendations from the Infrastructure & Asset management department.

   iii. Connection details of onsite potable water supply system to serve Lots 41-47 in accordance with the Three Waters Assessment prepared by Hawthorn Geddes Limited dated 24 August 2022, and more specifically the details identified on the drawing entitled ‘Potable Water concept Plan’ Figure No. 6 Rev R2. The water supply must provide for water for firefighting in accordance with NZ Fire Service Fire Fighting Water Supplies Code of Practice SNZ PAS 4509:2008.

   iv. Details of stormwater connections and mitigation in accordance with the Stormwater Management report by Hawthorn Geddes Ref:12546 Rev 2 Dated 13th April 2022 to serve Lots 41-47

   v. Design details of formation of legal access Lots 52 and 53 to a sealed 3 metre carriageway width with a formed crossing onto the road to vest, and design details of the crossing to service Lot 41

   vi. A streetlighting design for the new road to vest, internal accessways, and parking areas in accordance with the Northland Transportation Alliance Streetlight Design Manual.

d) Submit a Construction Management Plan to be approved by the Council. The plan shall contain information on, and site management procedures, for the following:

i. The timing of construction, including hours of work, key project and site management personnel (including Construction Engineer), and planned dated and duration of contract.
ii. The transportation of construction material from and to the site and associated controls on vehicles through sign-posted site entrance/exits and the loading and unloading of materials.
iii. Control of dust and noise on-site and any necessary avoidance or remedial measures.
iv. Prevention of earth and other material being deposited on surrounding roads from vehicles and remedial actions should it occur.
v. Publicity measures and safety measures, including signage, to inform adjacent landowners and occupiers, pedestrians and other users or Road if required.
vi. Erosion and sediment control measures to be in place for the duration of the works.
vii. A Traffic Management Plan where required.

All construction on the site is to be undertaken in accordance with the approved construction management plan.

e) Provide for Council approval a preferred road name and two alternatives for the road to vest. The applicant is advised that in accordance with Community Board policy, road names should reflect the history of the area.

7. That prior to issuing of a Section 224 certificate under the Act:

a) The Consent Holder shall ensure that the approved works specified in condition 6(c) above are constructed in accordance with the Councils Engineering Standards and Guidelines 2004 and the approved plans to the satisfaction of final inspection by the Development Engineer or designate.

b) Upon completion of the works specified in condition 6(c) above, provide certification by way of PS4 of the work from a chartered professional engineer or a suitably qualified professional (i.e. Surveyor as provided for under Appendix E of the Engineering Standards)) that all work has been completed in accordance with the approved plans.

Note: All vested infrastructure/assets will require PS1 and PS4 from Chartered Professional Engineer. A suitably qualified professional can provide certificates for private assets if approved by Councils Engineer.

c) Upon completion of the works specified in condition 6(c) above, provide certification by way of PS3 from the road construction and drainage contractor that the vested road and three waters infrastructure is constructed in accordance with Councils Engineering Standards and Guidelines 2004 and approved plans.

d) Provide evidence that a maintenance agreement has been entered into with the contractor who is to maintain the work which is to vest in Council for a minimum period of 12 months. The minimum value of the bond, or retention money held in lieu of a bond, shall be 10% of the construction cost.

e) The Consent Holder shall provide to Council's development engineer or designate for approval, as-built plans for vested road, foot paths, storm water drainage, lighting, signage and marking complying with schedule 1D of NZS 4404:2004 and section 1.5.2.5 of Councils Engineering standards

and guidelines and in RAAM format for the newly constructed section of road for inputting into the roading database.

f) Provide documentation that the service providers of electric power and telecommunications to the sites are satisfied with the arrangements made for the provision of these services to the boundary of all new allotments.

g) Provide confirmation from Councils maintenance contractor that the purchase and installation of the council approved road name sign for the road to vest as approved under Condition 6.e) above is accepted and will be installed on the vesting of road to council. (i.e. paid invoice is sufficient).

h) Provide confirmation from a Licensed Cadastral Surveyor that the vested road and private common access lot and all reticulated assets are entirely within the appropriate easements and boundaries.

i) Provide evidence by way of a written statement from a suitably qualified and experienced person to confirm that the earth bund and landscape planting as shown on the plan prepared by Simon Cocker Landscape Architecture Limited entitled 'Landscape Mitigation Plan' dated 3rd June 2022 has been implemented and completed across the frontage of Lot 47, inclusive of the 1.5 metre high acoustic fence and closure of the existing vehicle crossing servicing easement A (to be cancelled).

j) Pursuant to Section 221 of the Resource Management Act 1991, a consent notice must be prepared and be registered on the Computer Freehold Register of the specified lots at the consent holder's expense, containing the following conditions which are to be complied with on a continuing basis by the subdividing owner and subsequent owners:

   i. Lots 41 - Prior to construction of a dwelling, the owner shall construct a vehicle crossing in accordance with Far North District Councils engineering standards. Where a crossing is proposed onto a council road, a vehicle crossing permit approval is required from the council.

   ii. Lot 47 shall not form nor utilise any informal vehicle crossing access onto Kerikeri Road.

   iii. Lot 47 – The earth bund, fence and landscaping implemented under Condition 7g) above in accordance with the plan prepared by Simon Cocker Landscape Architecture Limited entitled 'Landscape Mitigation Plan' dated 3rd June 2022 shall be maintained in perpetuity by the owners of Lot 47. A copy of the Plan shall be attached to this consent notice.

   iv. Lots 41 – 47 – Any development shall comply with the restrictions and recommendations identified in the Geotechnical Report for Proposed Subdivision prepared by Hawthorn Geddes Limited dated 28 February 2022.

   v. Lots 41 – 47 – The owners and occupiers of the lots are to be made aware that adjacent land is currently and may continue to be used for horticultural activities inclusive of noise and spraying activities.

vi. Lots 41 – 47 - At the time of lodgement of a building consent for a dwelling on the lots, the owner shall provide a design prepared by a suitably qualified professional for an on-site stormwater soakage pit capable of providing suitable soakage for rainfall events up to and included a 5 year Annual Return Interval. Overflows from the soakage pits are to be discharged via the reticulated stormwater network. Once approved, the soakage pit is to be constructed and maintained in accordance with the approved design.

Landuse Consent – Earthworks

1. Earthworks at the site are to be carried out in accordance with the document "Erosion and Sediment Control Guide for Land Disturbing Activities in the Auckland Region", June 2016, Guideline Document 2016/005, Incorporating Amendment 1, Auckland Council Guideline Document 2016/005 and generally in accordance with the Reyburn and Bryant Earthworks Design drawings, EW16655, Sheets 1 – 3, Revision C dated 2 June 2022.

2. All consented earthworks to be undertaken on the site are to be supervised by a Chartered Professional Engineer to be engaged by the Consent Holder. The Council is to be advised in writing of the appointment of the engineer and notified when work is to commence, and when work is completed.

3. Prior to commencing any earthworks, the consent holder shall provide to Council:
   - Details of a successful contractor.
   - Details of the planned date and duration of the contract.

4. Prior to commencing any earthworks, an Earthworks Management Plan shall be submitted to and approved by the Council. The plan shall contain information on, and site management procedures, for the following:

   a) The timing of earthworks, including hours of work, key project and site management personnel.
   b) The transportation of earthworks material from and to the site and associated controls on vehicles through sign-posted site entrance/exits and the loading and unloading of materials.
   c) Control of dust and noise on-site and any necessary avoidance or remedial measures.
   d) Prevention of earth and other material being deposited on surrounding roads from vehicles and remedial actions should it occur.
   e) Publicity measures and safety measures, including signage, to inform adjacent landowners and occupiers, pedestrians and other users or Road if required.
   f) Erosion and sediment control measures to be in place for the duration of works.
   g) Any traffic management required associated with heavy construction vehicles and/or staff access to and from the site.

   Note: The Earthworks Management Plan may be lodged as part of or in conjunction with the Erosion and Sediment Control Plan required under Condition 5 of the consent issued by the Northland Regional Council.

5. An earthworks completion report shall be provided to Council upon completion of the earthworks. It shall be prepared by a chartered professional engineer in accordance with Schedule 2A of NZ4404:2010.

Landuse Consent - National Environmental Standard for Assessing and Managing Contaminants in Soils to Protect Human Health Regulations 2011

1. Prior to commencement of any site works including earthworks (including earthworks) on land identified as requiring remediation, the consent holder shall ensure that all works as specified in Section 8.3 of the Remedial Action Plan and the Site Management Plan as prepared by Hawthorn Geddes Limited forming part of the report entitled 'Combined Site Investigation Report for 373 and 377 Kerikeri Road, Kerikeri' dated 21 December 2021 are undertaken and completed. On completion of the works specified in the Remedial Action Plan, the consent holder shall provide a Site Validation Report to the Council, prepared by a suitably qualified and experienced practitioner, that confirms that the Remedial Action Plan and Site Management Plan have been implemented, and confirms that the level of soil contamination meets the relevant SCS (Residential / 10% produce).

   Note: A copy of the Site Validation Report will be retained by the Council and may form part of any future Land Information Memorandum issued by the Council for any lots created by this development.

Advice Notes:

1. Pursuant to section 125 of the Resource Management Act 1991, this resource consent will lapse 5 years after the date of commencement of consent unless, before the consent lapses;
   a) The consent is given effect to; or
   b) An application is made to the Council to extend the period of consent, and the council decides to grant an extension after taking into account the statutory considerations, set out in section 125(1)(b) of the Resource Management Act 1991.

2. This consent has been prepared on the basis that the earthworks approved under the land use consent may proceed before receipt and approval of engineering plans for civil works required under the subdivision consent. The consent holder is solely responsible for ensuring that any and all earthworks undertaken are suitable to accommodate the proposed civil engineering works as approved by the Council.

3. The condition providing for connection of the proposed development to the Council's reticulated sewerage scheme has been offered by the applicant on the basis that the works may require upgrading of existing public reticulation over land not under the control of the Council or the consent holder. Council's Three Waters Asset Manager may assist to secure rights to lay the new rising main along the route of the existing rising main serving the subject property to provide the most direct and beneficial route to the existing Hall Road network. If rights to utilise this route cannot be secured, then the rising main will need to connect to Hall Road via Kerikeri Road with any necessary upgrades to existing rising mains and pumpstations completed. Should this occur, a formal variation

to the conditions of consent regarding connection to sewer via Kerikeri Road may be required.

4. Should the consent holder choose to, they may enter into negotiations with the Council regarding any possible contributions to be made as part of upgrading sewer reticulation to service the surrounding area, noting that the Council is not obliged to agree to any contributions

5. Councils Parks Department have specifically considered the need for additional recreational reserve land in conjunction with this development. Further development of the land subject to this consent may require consideration of suitable land to be vested as a reserve.

6. The consent holder shall abide by the consents issued by the Northland Regional Council for earthworks and stormwater diversion and discharge when designing and undertaking all works under this subdivision and land use consent.

7. Approval of the amalgamation conditions by Land Information New Zealand is pending at the time of issuing of this decision. The approval and associated reference number will be provided on receipt from LINZ.

Reasons for the Decision

1. The Council has determined (by way of an earlier report and resolution) that the application does not require public or limited notification.

2. For the purposes of Section 104(1)(a), the adverse effects of the subdivision are considered to be less than minor, subject to the various technical reports and recommendations for conditions contained therein, and therefore are considered to be acceptable in the receiving environment. Notably, the proposal provides for a residential scale of subdivision and resulting development on land that is within the Residential Zone. To that extent, residential development of the site is anticipated and provided for by the Operative District Plan and, to the extent it is relevant, the proposed District Plan.

3. The application includes requests for consent under Sections 241(3) and 243€ of the RMA. These matters are administrative only and are largely a result of the staging of the development.

4. In terms of conditions required under Section 108 and 220, the development requires reticulation to provide water, sewer and stormwater services to each lot and the construction of an internal roading network. Specific works are required to be undertaken on the intersection of the road to vest and Kerikeri Road.

5. Connection of the development to the existing sewer network will require conditions reflecting the need to upgrade existing infrastructure through private property outside the control of the consent holder. The applicant has offered, and the Council has accepted, a condition on an *Augier* basis reflecting the

potential risk associated with the upgrade of existing infrastructure on other private land. In addition, a condition has been offered by the applicant and included in the consent to address future development on proposed Lot 101, noting that it has a restricted building area given its narrow width.

6. As recorded in the Notification Assessment report, there are no rules in the Residential Zone that recognise potential for land use conflict issues to arise where the site adjoins a Rural Living Zone currently used for horticultural activities. However, it is a matter that can be addressed by way of 'Matters to be Taken into Account' under 13.7.3.11. A consent notice condition registered against Lots 41 – 47 advising of existing horticultural activities taking place on adjacent land is therefore considered appropriate.

7. With regard specifically to the consent sought under the NESCS, a suitable condition can be imposed that requires adherence to the findings of the technical reports provided, including provision of a Site Validation Report to confirm completion of all remedial works.

8. Section 104(1)(ab) requires consideration of any environmental offset or compensation proposed. This is not relevant to the application.

9. Section 104(1)(c) requires consideration of a hierarchy of planning documents from national to district level. The following assessment addresses the relevant provisions.

10. Section 104(1)(b)(i) requires consideration of any national environmental standard. The application includes specific consent sought under the NESCS as a restricted discretionary activity. The Detailed Site Investigation report provided in Appendix 3 specifically addresses the NESCS provisions and identifies that consent is required as a restricted discretionary activity consent due to identification of a piece of land on the site that exceeds the relevant SCS for arsenic. The report includes a Remedial Action Plan providing for the removal of approximately $7m^3$ of contaminated soils to be disposed of via landfill. On completion of the works a Site Validation Report will be required to confirm the success of remediation. Subject to imposition of conditions requiring the Remedial Action Plan and Site Validation Plan to be implemented and completed as part of the earthworks associated with the development, the proposal is assessed as consistent with the NESCS.

11. It is recorded that the National Policy Statement on Highly Productive Land ('NPS-HPL') has been released prior to lodgement of this application and therefore requires consideration. The soils identified on the site are identified as Land Use Capability Class 2s1 which is defined as highly versatile soils under the Regional Policy Statement for Northland ('RPS') and is understood to equate to 'LUC 2' land under the NPS-HPL.

12. As the NPS-HPL directs changes to the regional policy statement to address highly productive land, the following assessment relates solely to the NPS-HPL provisions as they effectively will replace any current RPS objectives and policies. Section 3.5(7) of the NPS-HPL is relevant and states as follows:

'Until a regional policy statement containing maps of highly productive land in the region is operative, each relevant territorial authority and consent authority must apply this National Policy Statement as if references to highly productive land were references to land that, at the commencement date:
(a) is:

(i) zoned general rural or rural production; and
(ii) LUC 1, 2, or 3 land;

(b) is not:
(i) identified for future urban development; or
(ii) subject to a Council initiated, or an adopted, notified plan change to rezone it from general rural or rural production to urban or rural lifestyle.'

13. As the subject site is not zoned general rural or rural production, and is currently zoned residential, the application does not require consideration against the NPS-HPL.

14. There are no other regulations of national policy statements that are directly relevant to the proposal.

15. Having reviewed the Regional Policy Statement and Proposed Regional Plan for Northland, there are no provisions identified that require specific consideration as they relate to the application. This is largely on the basis that the proposal involves residential development on residential zoned land, and the granting of consent by the Northland Regional Council to earthworks and stormwater discharges directly address the relevant Policy Statement and Plan provisions.

16. Section 104(1)(b)(vi) requires regard to be had to the contents of any plan or proposed plan. At the time of preparing this decision, both the Operative and proposed Far North District Plan are relevant and require consideration.

17. Section 6 of the application provides an assessment of the objectives and policies contained in the Residential Zone, Soils and Minerals, Subdivision, and Transportation. That assessment concludes that *'The assessment provided above confirms that the proposed subdivision is consistent with the policy direction of the FNDP.'*

18. Based on the information provided with the application, inclusive of conditions offered and recommended by Council and the existing granted consent from Northland Regional Council, the conclusion is accepted and adopted for the purpose of this report.

19. The proposed Far North District Plan was released on the 27th July 2022 and is relevant to the proposal. The extent of rules that have immediate legal effect was assessed under the Notification report and the proposal is deemed a permitted activity. The weighting to be given to the objectives and policies of the proposed Plan at this time is considered to be minimal given the proposed Plan has yet to progress beyond the submission period as required under the First Schedule of the RMA.

20. Section 104(1)(c) requires consideration of Other Matters. There are no other matters that require consideration as part of the application.

21. As per current case law, an assessment of relevant matters under Section 104 is subject to Part 2. A council must have regard to the provisions of Part 2 when it is appropriate to do so. In this case, the application and the matters requiring assessment are not considered to require a detailed assessment of Part 2 matters.

22. Taking into account the permitted baseline applicable to the development on the site and the general consistency of the application with the District Plan provisions, it is considered that the activity is consistent with the sustainable management purpose of the RMA. Consent can therefore be granted subject to one condition, being a general accordance condition.

23. For completeness, it is recorded that suitable resolutions addressing the requests to cancel easements and amalgamation conditions can form part of the staged subdivision consent.

Approval
This resource consent has been prepared by A Hartstone, Consultant Planner, and is granted under delegated authority (pursuant to Section 34A of the Resource Management Act 1991) from the Far North District Council by:

Pat Killalea, Principal Planner

Date: 16th November 2022

Right of Objection
If you are dissatisfied with the decision or any part of it, you have the right (pursuant to section 357A of the Resource Management Act 1991) to object to the decision. The objection must be in writing, stating reasons for the objection and must be received by Council within 15 working days of the receipt of this decision.

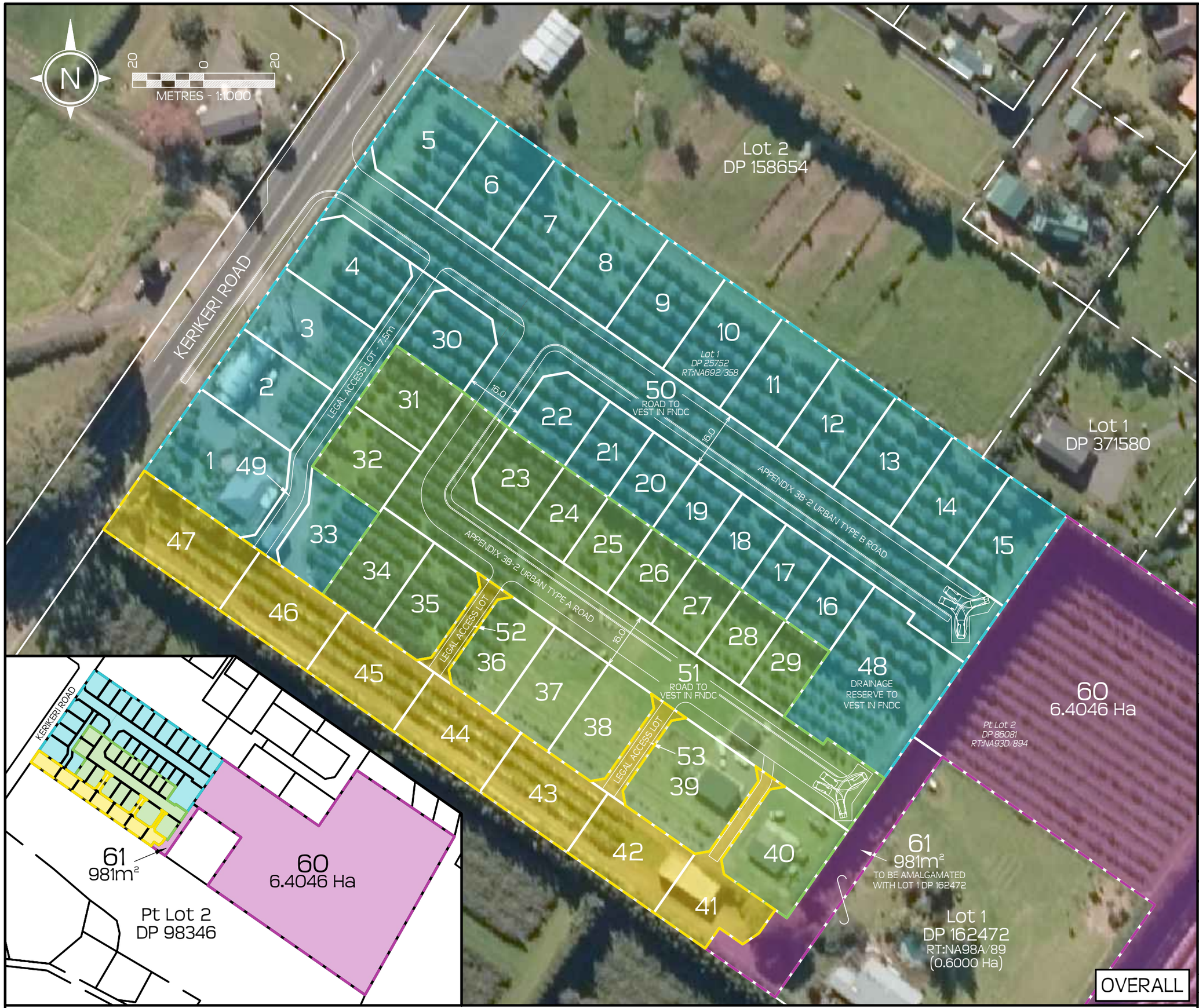

CAUTION:

1. THIS DRAWING SHOULD NOT BE AMENDED MANUALLY.
2. AREAS & DIMENSIONS ARE APPROXIMATE ONLY AND ARE SUBJECT TO FINAL SURVEY.
3. THE VENDOR & PURCHASER MUST CONTACT THE SURVEYOR IF SALE & PURCHASE AGREEMENTS ARE ENTERED INTO USING THIS PLAN.
4. SERVICES MUST NOT BE POSITIONED USING THIS PLAN.
5. DO NOT SCALE OFF DRAWINGS.
6. THIS PLAN IS COPYRIGHT TO REYBURN & BRYANT (1999) LIMITED.
7. DESIGNED BY REYBURN & BRYANT - WHANGAREI - NEW ZEALAND
8. 04m 2014-2016 RURAL AERIAL SOURCED FROM AERIAL SURVEYS LTD INFORMATION AVAILABLE ON LINZ DATA SERVICE.
9. 2020 1m LiDAR CONTOUR INFORMATION COURTESY OF THE NRC.
10. BOUNDARIES SOURCED FROM QUICKMAP. COORDINATES IN TERMS OF MOUNT EDEN 2000.

PROPOSED AMALGAMATION CONDITION

PURSUANT TO SECTION 220 (1)(b)(i) OF THE RMA 1991

THAT LOT 61 HEREON BE TRANSFERRED TO THE OWNER OF LOT 1 DP 162472 (RT:NA98A/89) AND THAT ONE RECORD OF TITLE BE ISSUED TO INCLUDE BOTH PARCELS

STAGE 1

STAGE 2

STAGE 3

STAGE 4

APPROVED PLAN

Planner: pkillalea
RC: 2220850
Date: 16/11/2022

SUBD AREA: 9.9688 Ha
AMALG AREA: 0.6000 Ha
TOTAL AREA: 10.5688 Ha
COMPRISED IN: RT NA692/358, NA93D/894 & NA98A/89 (ao)

THIS SITE IS ZONED ' RESIDENTIAL ' AND THE BUILDING SETBACKS ARE THUS: 9m FROM KERIKERI ROAD BOUNDARIES, 1.2m FROM ALL OTHER BOUNDARIES WITH ONE ALLOWED AT 0m FOR A DISTANCE OF 10m ALONG THE BOUNDARY.

REV	DATE	DESCRIPTION
F	20.04.22	STAGING AMENDMENTS - RS/CC
E	23.11.21	LOT 41 & LOT 61 BOUNDARY ADJUSTMENT - RS/CC
A	01.10.21	FIRST ISSUE - RS/CC

REF. DATA:

reyburn & bryant
Ph: 09 438 3563
PO Box 191, Whangarei 0140
7 Selwyn Ave, Whangarei
www.reyburnandbryant.co.nz

CLIENT

TRAVERSE DEVELOPMENT LTD
373 & 377 KERIKERI ROAD, KERIKERI

TITLE

PROPOSED SUBDIVISION OF LOT 1 DP 25752 & PT LOT 2 DP 86081

DATE	APRIL 2022	SCALE	1:1000 @A3	
NO.	S16655	SHEET	1/5	Rev. F

Date Plotted: 20/04/2022 File Path: P:\16000 - 16999\16655 - Traverse Ltd (Kerikeri Road)\Drawings\Scheme Plan\S16655 - Traverse - F.dwg

LOCAL AUTHORITY: FAR NORTH DISTRICT COUNCIL

Date Plotted: 20/04/2022 File Path: P:\16000 - 16999\16655 - Traverse Ltd (Kerikeri Road)\Drawings\Scheme Plan\S16655 - Traverse - F.dwg

LOCAL AUTHORITY: FAR NORTH DISTRICT COUNCIL

CAUTION:

1. THIS DRAWING SHOULD NOT BE AMENDED MANUALLY.
2. AREAS & DIMENSIONS ARE APPROXIMATE ONLY AND ARE SUBJECT TO FINAL SURVEY.
3. THE VENDOR & PURCHASER MUST CONTACT THE SURVEYOR IF SALE & PURCHASE AGREEMENTS ARE ENTERED INTO USING THIS PLAN.
4. SERVICES MUST NOT BE POSITIONED USING THIS PLAN.
5. DO NOT SCALE OFF DRAWINGS.
6. THIS PLAN IS COPYRIGHT TO REYBURN & BRYANT (1999) LIMITED.
7. DESIGNED BY REYBURN & BRYANT - WHANGAREI - NEW ZEALAND
8. 04m 2014-2016 RURAL AERIAL SOURCED FROM AERIAL SURVEYS LTD INFORMATION AVAILABLE ON LINZ DATA SERVICE.
9. 2020 1m LiDAR CONTOUR INFORMATION COURTESY OF THE NRC.
10. BOUNDARIES SOURCED FROM QUICKMAP. COORDINATES IN TERMS OF MOUNT EDEN 2000.

PROPOSED AMALGAMATION CONDITION

PURSUANT TO SECTION 220 (1)(b)(i) OF THE RMA 1991

THAT LOT 61 HEREON BE TRANSFERRED TO THE OWNER OF LOT 1 DP 162472 (RT:NA98A/89) AND THAT ONE RECORD OF TITLE BE ISSUED TO INCLUDE BOTH PARCELS

PROPOSED CANCELLATION OF NON-CONDITIONAL EASEMENT

THE WATER RIGHT OVER LOT 1 DP 25725 & APPURTENANT TO PT LOT 2 DP 86081 (FORMERLY LOT 2 DP 25725) & CREATED BY T.570871;

IS TO BE REVOKED

— — — — EXISTING EASEMENT TO BE CANCELED

PROPOSED EASEMENT SCHEDULE

PURPOSE	SHOWN	SERV.TENE. (BURDENED)	DOM.TENE. (BENEFITTED)
RIGHT OF WAY	(A)	LOT 62 HEREON	LOTS 60, 61 HEREON & LOT 1 DP 162472
	(B)	LOT 61 HEREON	LOT 60 HEREON

SUBD AREA: 9.9688 Ha
AMALG AREA: 0.6000 Ha
TOTAL AREA: 10.5688 Ha
COMPRISED IN: RT NA692/358, NA93D/894 & NA98A/89 (ao)

THIS SITE IS ZONED ' RESIDENTIAL ' AND THE BUILDING SETBACKS ARE THUS: 9m FROM KERIKERI ROAD BOUNDARIES, 1.2m FROM ALL OTHER BOUNDARIES WITH ONE ALLOWED AT 0m FOR A DISTANCE OF 10m ALONG THE BOUNDARY.

REV	DATE	DESCRIPTION
F	20.04.22	STAGING AMENDMENTS - RS/CC
E	23.11.21	LOT 41 & LOT 61 BOUNDARY ADJUSTMENT - RS/CC
A	01.10.21	FIRST ISSUE - RS/CC

REF. DATA:

reyburn & bryant
Ph: 09 438 3563
PO Box 191, Whangarei 0140
7 Selwyn Ave, Whangarei
www.reyburnandbryant.co.nz

CLIENT

TRAVERSE DEVELOPMENT LTD
373 & 377 KERIKERI ROAD, KERIKERI

TITLE

PROPOSED SUBDIVISION OF LOT 1 DP 25752 & PT LOT 2 DP 86081

DATE	APRIL 2022	SCALE	1:1000 @A3	
NO.	S16655	SHEET	2/5	Rev. F

EXISTING EASEMENT SCHEDULE

PURPOSE	SHOWN	SERV.TENE. (BURDENED)	DOM.TENE. (CREATED)
RIGHT OF WAY	(A)	LOT 100 HEREON	LOT 61 STAGE 1 & LOT 1 DP 162472

Date Plotted: 20/04/2022 File Path: P:\16000 - 16999\16655 - Traverse Ltd (Kerikeri Road)\Drawings\Scheme Plan\S16655 - Traverse - F.dwg

LOCAL AUTHORITY: FAR NORTH DISTRICT COUNCIL

CAUTION:

1. THIS DRAWING SHOULD NOT BE AMENDED MANUALLY.
2. AREAS & DIMENSIONS ARE APPROXIMATE ONLY AND ARE SUBJECT TO FINAL SURVEY.
3. THE VENDOR & PURCHASER MUST CONTACT THE SURVEYOR IF SALE & PURCHASE AGREEMENTS ARE ENTERED INTO USING THIS PLAN.
4. SERVICES MUST NOT BE POSITIONED USING THIS PLAN.
5. DO NOT SCALE OFF DRAWINGS.
6. THIS PLAN IS COPYRIGHT TO REYBURN & BRYANT (1999) LIMITED.
7. DESIGNED BY REYBURN & BRYANT - WHANGAREI - NEW ZEALAND
8. 04m 2014-2016 RURAL AERIAL SOURCED FROM AERIAL SURVEYS LTD INFORMATION AVAILABLE ON LINZ DATA SERVICE.
9. 2020 1m LiDAR CONTOUR INFORMATION COURTESY OF THE NRC.
10. BOUNDARIES SOURCED FROM QUICKMAP. COORDINATES IN TERMS OF MOUNT EDEN 2000.

PROPOSED CANCELLATION OF CONDITIONAL EASEMENTS

PURSUANT TO SECTION 243(e) OF THE RMA 1991, THE CONDITIONS AS TO THE CREATION OF:

THE RIGHT OF WAY MARKED 'A' ON STAGE 1; OVER LOT 62 STAGE 1; IS TO BE CANCELLED AS IT RELATES TO LOT 60 STAGE 1 &
THE RIGHT OF WAY, MARKED B ON STAGE 1, OVER LOT 61 STAGE 1 & APPURTENANT TO LOT 60 STAGE 1 & CREATED ON STAGE 1; IS TO BE REVOKED

REASON: LOT 60 STAGE 1 WILL NOW GAIN ACCESS FROM ROAD TO VEST (LOT 50).

PROPOSED AMALGAMATION CONDITION

PURSUANT TO SECTION 220 (1)(b)(iv) OF THE RMA 1991

THAT LOT 49 HEREON (LEGAL ACCESS) BE HELD AS TO SIX UNDIVIDED ONE-SIXTH SHARES BY THE OWNERS OF LOTS 1, 2, 3 & 33 HEREON (ONE SHARE EACH) AND LOT 100 HEREON (TWO SHARES) AS TENANTS IN COMMON IN THE SAID SHARES AND THAT INDIVIDUAL RECORDS OF TITLE BE ISSUED IN ACCORDANCE THEREWITH.

APPROVED PLAN

Planner: pkillalea
RC: 2220850
Date: 16/11/2022

TOTAL AREA: 3.4661 Ha
COMPRISED IN: RT NA692/358, NA93D/894

THIS SITE IS ZONED ' RESIDENTIAL ' AND THE BUILDING SETBACKS ARE THUS: 9m FROM KERIKERI ROAD BOUNDARIES, 1.2m FROM ALL OTHER BOUNDARIES WITH ONE ALLOWED AT 0m FOR A DISTANCE OF 10m ALONG THE BOUNDARY.

REV	DATE	DESCRIPTION
F	20.04.22	STAGING AMENDMENTS - RS/CC
E	23.11.21	LOT 41 & LOT 61 BOUNDARY ADJUSTMENT - RS/CC
A	01.10.21	FIRST ISSUE - RS/CC

REF. DATA:

reyburn & bryant
Ph: 09 438 3563
PO Box 191, Whangarei 0140
7 Selwyn Ave, Whangarei
www.reyburnandbryant.co.nz

CLIENT

TRAVERSE DEVELOPMENT LTD
373 & 377 KERIKERI ROAD, KERIKERI

TITLE

PROPOSED SUBDIVISION OF LOT 1 DP 25752 & PT LOT 2 DP 86081

DATE	APRIL 2022	SCALE	1:1000 @A3
NO.	S16655	SHEET 3/5	Rev. F

Date Plotted: 20/04/2022 File Path: P:\16000 - 16999\16655 - Traverse Ltd (Kerikeri Road)\Drawings\Scheme Plan\S16655 - Traverse - F.dwg

LOCAL AUTHORITY: FAR NORTH DISTRICT COUNCIL

CAUTION:

1. THIS DRAWING SHOULD NOT BE AMENDED MANUALLY.
2. AREAS & DIMENSIONS ARE APPROXIMATE ONLY AND ARE SUBJECT TO FINAL SURVEY.
3. THE VENDOR & PURCHASER MUST CONTACT THE SURVEYOR IF SALE & PURCHASE AGREEMENTS ARE ENTERED INTO USING THIS PLAN.
4. SERVICES MUST NOT BE POSITIONED USING THIS PLAN.
5. DO NOT SCALE OFF DRAWINGS.
6. THIS PLAN IS COPYRIGHT TO REYBURN & BRYANT (1999) LIMITED.
7. DESIGNED BY REYBURN & BRYANT - WHANGAREI - NEW ZEALAND
8. 04m 2014-2016 RURAL AERIAL SOURCED FROM AERIAL SURVEYS LTD INFORMATION AVAILABLE ON LINZ DATA SERVICE.
9. 2020 1m LiDAR CONTOUR INFORMATION COURTESY OF THE NRC.
10. BOUNDARIES SOURCED FROM QUICKMAP. COORDINATES IN TERMS OF MOUNT EDEN 2000.

EXISTING EASEMENT SCHEDULE

PURPOSE	SHOWN	SERV.TENE. (BURDENED)	DOM.TENE. (CREATED)
RIGHT OF WAY	(A)	LOT 101 HEREON	LOT 61 HEREON & LOT 1 DP 162472

PROPOSED CANCELLATION OF AMALGAMATION CONDITION

PURSUANT TO SECTION 240 (4) OF THE RMA 1991

THE FAR NORTH DISTRICT COUNCIL RESOLVES TO CANCEL THE AMALGAMATION CONDITION IN RELATION TO THE TWO UNDIVIDED ONE-SIXTH SHARES OF LOT 49 STAGE 2 (LEGAL ACCESS) HELD BY THE OWNER OF LOT 100 STAGE 2.

REASON: THESE SHARES ARE TO BE REDISTRIBUTED AT THIS STAGE

PROPOSED AMALGAMATION CONDITION

PURSUANT TO SECTION 220 (1)(b)(iv) OF THE RMA 1991

REDISTRIBUTION OF SHARES: THAT LOT 49 STAGE 2 (LEGAL ACCESS) BE HELD AS TO TWO (EXISTING) UNDIVIDED ONE-SIXTH SHARES BY THE OWNERS OF LOT LOT 101 HEREON AS TENANTS IN COMMON IN THE SAID SHARES AND THAT INDIVIDUAL RECORDS OF TITLE BE ISSUED IN ACCORDANCE THEREWITH.

TOTAL AREA: 1.5435 Ha
COMPRISED IN: RT NA692/358, NA93D/894

THIS SITE IS ZONED ' RESIDENTIAL ' AND THE BUILDING SETBACKS ARE THUS: 9m FROM KERIKERI ROAD BOUNDARIES, 1.2m FROM ALL OTHER BOUNDARIES WITH ONE ALLOWED AT 0m FOR A DISTANCE OF 10m ALONG THE BOUNDARY.

REV	DATE	DESCRIPTION
F	20.04.22	STAGING AMENDMENTS - RS/CC
E	23.11.21	LOT 41 & LOT 61 BOUNDARY ADJUSTMENT - RS/CC
A	01.10.21	FIRST ISSUE - RS/CC

REF. DATA:

reyburn & bryant
Ph: 09 438 3563
PO Box 191, Whangarei 0140
7 Selwyn Ave, Whangarei
www.reyburnandbryant.co.nz

CLIENT

TRAVERSE DEVELOPMENT LTD
373 & 377 KERIKERI ROAD, KERIKERI

TITLE

PROPOSED SUBDIVISION OF LOT 1 DP 25752 & PT LOT 2 DP 86081

DATE	APRIL 2022	SCALE	1:1000 @A3
NO.	S16655	SHEET 4/5	Rev. F

TOTAL AREA: 0.4811 Ha
COMPRISED IN: RT NA692/358, NA93D/894

THIS SITE IS ZONED ' RESIDENTIAL ' AND THE BUILDING SETBACKS ARE THUS: 9m FROM KERIKERI ROAD BOUNDARIES, 1.2m FROM ALL OTHER BOUNDARIES WITH ONE ALLOWED AT 0m FOR A DISTANCE OF 10m ALONG THE BOUNDARY.

REV	DATE	DESCRIPTION
F	20.04.22	STAGING AMENDMENTS - RS/CC
E	23.11.21	LOT 41 & LOT 61 BOUNDARY ADJUSTMENT - RS/CC
A	01.10.21	FIRST ISSUE - RS/CC

REF. DATA:

Date Plotted: 20/04/2022 File Path: P:\16000 - 16999\16655 - Traverse Ltd (Kerikeri Road)\Drawings\Scheme Plan\S16655 - Traverse - F.dwg

LOCAL AUTHORITY: FAR NORTH DISTRICT COUNCIL

CAUTION:

1. THIS DRAWING SHOULD NOT BE AMENDED MANUALLY.
2. AREAS & DIMENSIONS ARE APPROXIMATE ONLY AND ARE SUBJECT TO FINAL SURVEY.
3. THE VENDOR & PURCHASER MUST CONTACT THE SURVEYOR IF SALE & PURCHASE AGREEMENTS ARE ENTERED INTO USING THIS PLAN.
4. SERVICES MUST NOT BE POSITIONED USING THIS PLAN.
5. DO NOT SCALE OFF DRAWINGS.
6. THIS PLAN IS COPYRIGHT TO REYBURN & BRYANT (1999) LIMITED.
7. DESIGNED BY REYBURN & BRYANT - WHANGAREI - NEW ZEALAND
8. 04m 2014-2016 RURAL AERIAL SOURCED FROM AERIAL SURVEYS LTD INFORMATION AVAILABLE ON LINZ DATA SERVICE.
9. 2020 1m LiDAR CONTOUR INFORMATION COURTESY OF THE NRC.
10. BOUNDARIES SOURCED FROM QUICKMAP. COORDINATES IN TERMS OF MOUNT EDEN 2000.

PROPOSED CANCELLATION OF CONDITIONAL EASEMENTS

PURSUANT TO SECTION 243 (e) OF THE RMA 1991,
THE CONDITIONS AS TO THE CREATION OF:

THE RIGHT OF WAY MARKED 'A' ON STAGE 3, OVER LOT 101 STAGE 3 & APPURTENANT TO LOT 61 STAGE 1 & LOT 1 DP 162472 & CREATED ON STAGE 1; IS TO BE REVOKED

REASON: LOT 61 STAGE 1 & LOT 1 DP 162472 IS SERVED FROM ROW & WILL NOW GAIN ACCESS FROM ROAD TO VEST (LOT 51).

PROPOSED CANCELLATION OF AMALGAMATION CONDITION

PURSUANT TO SECTION 240 (4) OF THE RMA 1991

THE FAR NORTH DISTRICT COUNCIL RESOLVES TO CANCEL THE AMALGAMATION CONDITION IN RELATION TO THE TWO UNDIVIDED ONE-SIXTH SHARES OF LOT 49 STAGE 2 (LEGAL ACCESS) HELD BY THE OWNER OF LOT 101 STAGE 3.

REASON: THESE SHARES ARE TO BE REDISTRIBUTED AT THIS STAGE

PROPOSED AMALGAMATION CONDITION

PURSUANT TO SECTION 220 (1)(b)(iv) OF THE RMA 1991

REDISTRIBUTION OF SHARES: THAT LOT 49 STAGE 2 (LEGAL ACCESS) BE HELD AS TO TWO (EXISTING) UNDIVIDED ONE-SIXTH SHARES BY THE OWNERS OF LOTS 46 & 47 HEREON (ONE SHARE EACH) AS TENANTS IN COMMON IN THE SAID SHARES,
&
THAT LOT 52 HEREON (LEGAL ACCESS) BE HELD AS TO TWO UNDIVIDED ONE-HALF SHARES BY THE OWNERS OF LOTS 44 & 45 HEREON (ONE SHARE EACH) AS TENANTS IN COMMON IN THE SAID SHARES,
&
THAT LOT 53 HEREON (LEGAL ACCESS) BE HELD AS TO TWO UNDIVIDED ONE-HALF SHARES BY THE OWNERS OF LOTS 42 & 43 HEREON (ONE SHARE EACH) AS TENANTS IN COMMON IN THE SAID SHARES,
AND THAT INDIVIDUAL RECORDS OF TITLE BE ISSUED IN ACCORDANCE THEREWITH.

reyburn & bryant
Ph: 09 438 3563
PO Box 191, Whangarei 0140
7 Selwyn Ave, Whangarei
www.reyburnandbryant.co.nz

CLIENT

TRAVERSE DEVELOPMENT LTD
373 & 377 KERIKERI ROAD, KERIKERI

TITLE

PROPOSED SUBDIVISION OF LOT 1 DP 25752 & PT LOT 2 DP 86081

DATE	APRIL 2022	SCALE	1:1000 @A3
NO.	S16655	SHEET 5/5	Rev. F

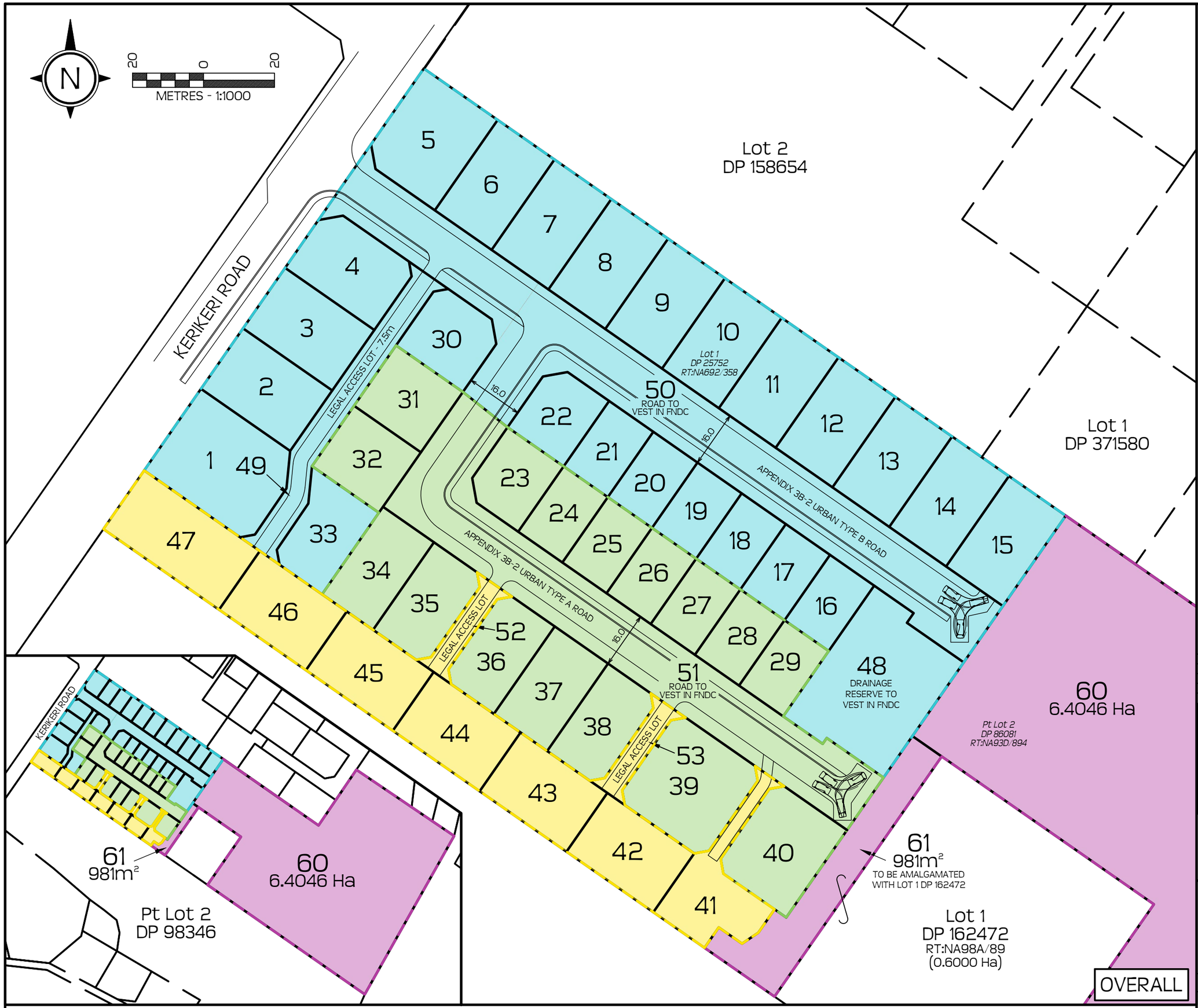

CAUTION:

1. THIS DRAWING SHOULD NOT BE AMENDED MANUALLY.
2. AREAS & DIMENSIONS ARE APPROXIMATE ONLY AND ARE SUBJECT TO FINAL SURVEY.
3. THE VENDOR & PURCHASER MUST CONTACT THE SURVEYOR IF SALE & PURCHASE AGREEMENTS ARE ENTERED INTO USING THIS PLAN.
4. SERVICES MUST NOT BE POSITIONED USING THIS PLAN.
5. DO NOT SCALE OFF DRAWINGS.
6. THIS PLAN IS COPYRIGHT TO REYBURN & BRYANT (1999) LIMITED.
7. DESIGNED BY REYBURN & BRYANT - WHANGAREI - NEW ZEALAND
8. 04m 2014-2016 RURAL AERIAL SOURCED FROM AERIAL SURVEYS LTD INFORMATION AVAILABLE ON LINZ DATA SERVICE.
9. 2020 1m LiDAR CONTOUR INFORMATION COURTESY OF THE NRC.
10. BOUNDARIES SOURCED FROM QUICKMAP. COORDINATES IN TERMS OF MOUNT EDEN 2000.

PROPOSED AMALGAMATION CONDITION

PURSUANT TO SECTION 220 (1)(b)(i) OF THE RMA 1991

THAT LOT 61 HEREON BE TRANSFERRED TO THE OWNER OF LOT 1 DP 162472 (RT:NA98A/89) AND THAT ONE RECORD OF TITLE BE ISSUED TO INCLUDE BOTH PARCELS

STAGE 1

STAGE 2

STAGE 3

STAGE 4

APPROVED PLAN

Planner: pkillalea
RC: 2220850
Date: 16/11/2022

SUBD AREA: 9.9688 Ha
AMALG AREA: 0.6000 Ha
TOTAL AREA: 10.5688 Ha
COMPRISED IN: RT NA692/358, NA93D/894 & NA98A/89 (ao)

THIS SITE IS ZONED ' RESIDENTIAL ' AND THE BUILDING SETBACKS ARE THUS: 9m FROM KERIKERI ROAD BOUNDARIES, 1.2m FROM ALL OTHER BOUNDARIES WITH ONE ALLOWED AT 0m FOR A DISTANCE OF 10m ALONG THE BOUNDARY.

REV	DATE	DESCRIPTION
F	20.04.22	STAGING AMENDMENTS - RS/CC
E	23.11.21	LOT 41 & LOT 61 BOUNDARY ADJUSTMENT - RS/CC
A	01.10.21	FIRST ISSUE - RS/CC

REF. DATA:

reyburn & bryant
Ph: 09 438 3563
PO Box 191, Whangarei 0140
7 Selwyn Ave, Whangarei
www.reyburnandbryant.co.nz

CLIENT

TRAVERSE DEVELOPMENT LTD
373 & 377 KERIKERI ROAD, KERIKERI

TITLE

PROPOSED SUBDIVISION OF LOT 1 DP 25752 & PT LOT 2 DP 86081

DATE	APRIL 2022	SCALE	1:1000 @A3	
NO.	S16655	SHEET	1/5	Rev. F

Date Plotted: 20/04/2022 File Path: P:\16000 - 16999\16655 - Traverse Ltd (Kerikeri Road)\Drawings\Scheme Plan\S16655 - Traverse - F.dwg

LOCAL AUTHORITY: FAR NORTH DISTRICT COUNCIL

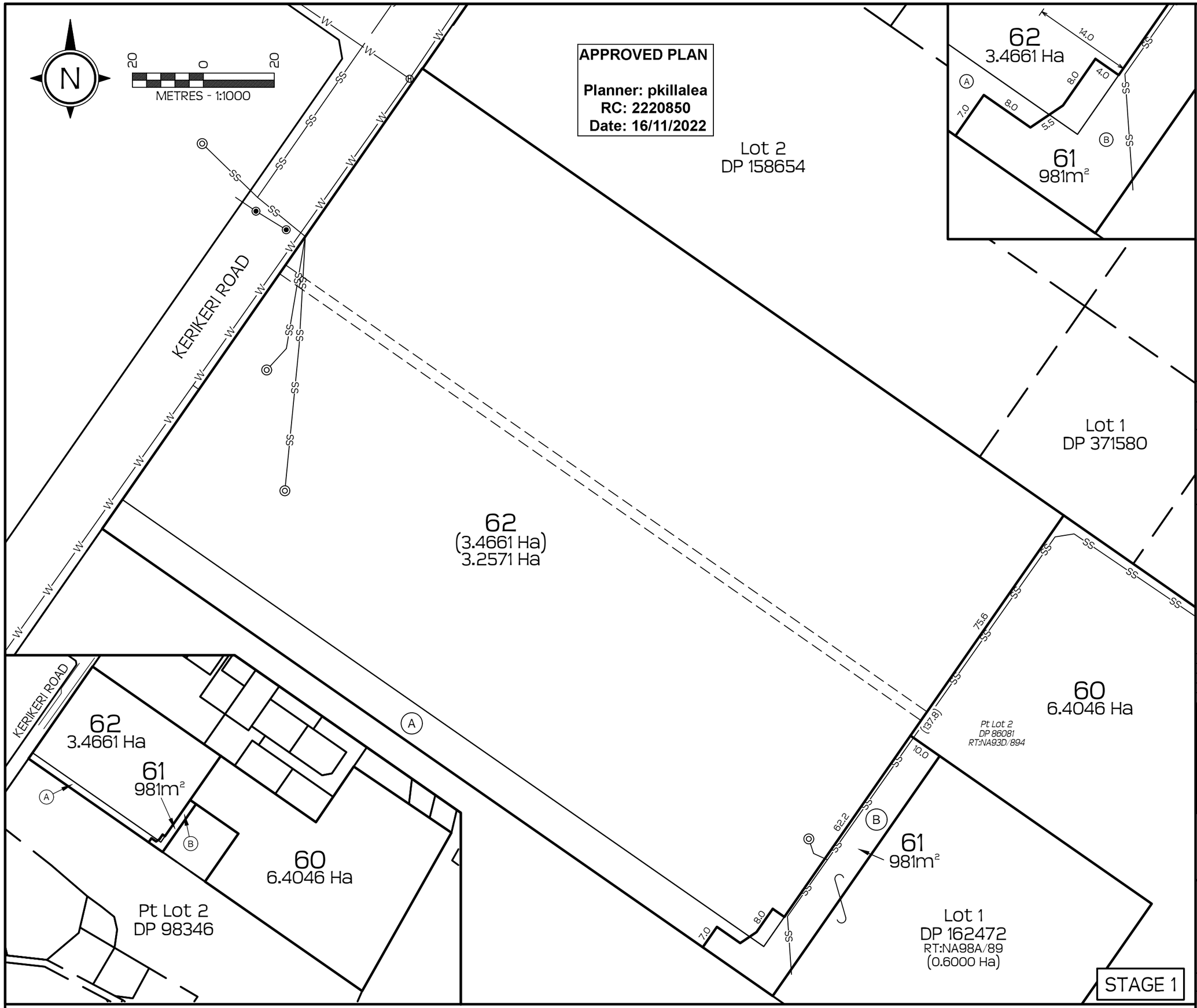

CAUTION:

1. THIS DRAWING SHOULD NOT BE AMENDED MANUALLY.
2. AREAS & DIMENSIONS ARE APPROXIMATE ONLY AND ARE SUBJECT TO FINAL SURVEY.
3. THE VENDOR & PURCHASER MUST CONTACT THE SURVEYOR IF SALE & PURCHASE AGREEMENTS ARE ENTERED INTO USING THIS PLAN.
4. SERVICES MUST NOT BE POSITIONED USING THIS PLAN.
5. DO NOT SCALE OFF DRAWINGS.
6. THIS PLAN IS COPYRIGHT TO REYBURN & BRYANT (1999) LIMITED.
7. DESIGNED BY REYBURN & BRYANT - WHANGAREI - NEW ZEALAND
8. 04m 2014-2016 RURAL AERIAL SOURCED FROM AERIAL SURVEYS LTD INFORMATION AVAILABLE ON LINZ DATA SERVICE.
9. 2020 1m LiDAR CONTOUR INFORMATION COURTESY OF THE NRC.
10. BOUNDARIES SOURCED FROM QUICKMAP. COORDINATES IN TERMS OF MOUNT EDEN 2000.

PROPOSED AMALGAMATION CONDITION

PURSUANT TO SECTION 220 (1)(b)(i) OF THE RMA 1991

THAT LOT 61 HEREON BE TRANSFERRED TO THE OWNER OF LOT 1 DP 162472 (RT:NA98A/89) AND THAT ONE RECORD OF TITLE BE ISSUED TO INCLUDE BOTH PARCELS

PROPOSED CANCELLATION OF NON-CONDITIONAL EASEMENT

THE WATER RIGHT OVER LOT 1 DP 25725 & APPURTENANT TO PT LOT 2 DP 86081 (FORMERLY LOT 2 DP 25725) & CREATED BY T.570871;

IS TO BE REVOKED

— — — — EXISTING EASEMENT TO BE CANCELED

PROPOSED EASEMENT SCHEDULE

PURPOSE	SHOWN	SERV.TENE. (BURDENED)	DOM.TENE. (BENEFITTED)
RIGHT OF WAY	(A)	LOT 62 HEREON	LOTS 60, 61 HEREON & LOT 1 DP 162472
	(B)	LOT 61 HEREON	LOT 60 HEREON

SUBD AREA: 9.9688 Ha
AMALG AREA: 0.6000 Ha
TOTAL AREA: 10.5688 Ha
COMPRISED IN: RT NA692/358, NA93D/894 & NA98A/89 (ao)

THIS SITE IS ZONED ' RESIDENTIAL ' AND THE BUILDING SETBACKS ARE THUS: 9m FROM KERIKERI ROAD BOUNDARIES, 1.2m FROM ALL OTHER BOUNDARIES WITH ONE ALLOWED AT 0m FOR A DISTANCE OF 10m ALONG THE BOUNDARY.

REV	DATE	DESCRIPTION
F	20.04.22	STAGING AMENDMENTS - RS/CC
E	23.11.21	LOT 41 & LOT 61 BOUNDARY ADJUSTMENT - RS/CC
A	01.10.21	FIRST ISSUE - RS/CC

REF. DATA:

reyburn & bryant
Ph: 09 438 3563
PO Box 191, Whangarei 0140
7 Selwyn Ave, Whangarei
www.reyburnandbryant.co.nz

CLIENT

TRAVERSE DEVELOPMENT LTD
373 & 377 KERIKERI ROAD, KERIKERI

TITLE

PROPOSED SUBDIVISION OF LOT 1 DP 25752 & PT LOT 2 DP 86081

DATE	APRIL 2022	SCALE	1:1000 @A3	
NO.	S16655	SHEET	2/5	Rev. F

Date Plotted: 20/04/2022 File Path: P:\16000 - 16999\16655 - Traverse Ltd (Kerikeri Road)\Drawings\Scheme Plan\S16655 - Traverse - F.dwg

LOCAL AUTHORITY: FAR NORTH DISTRICT COUNCIL

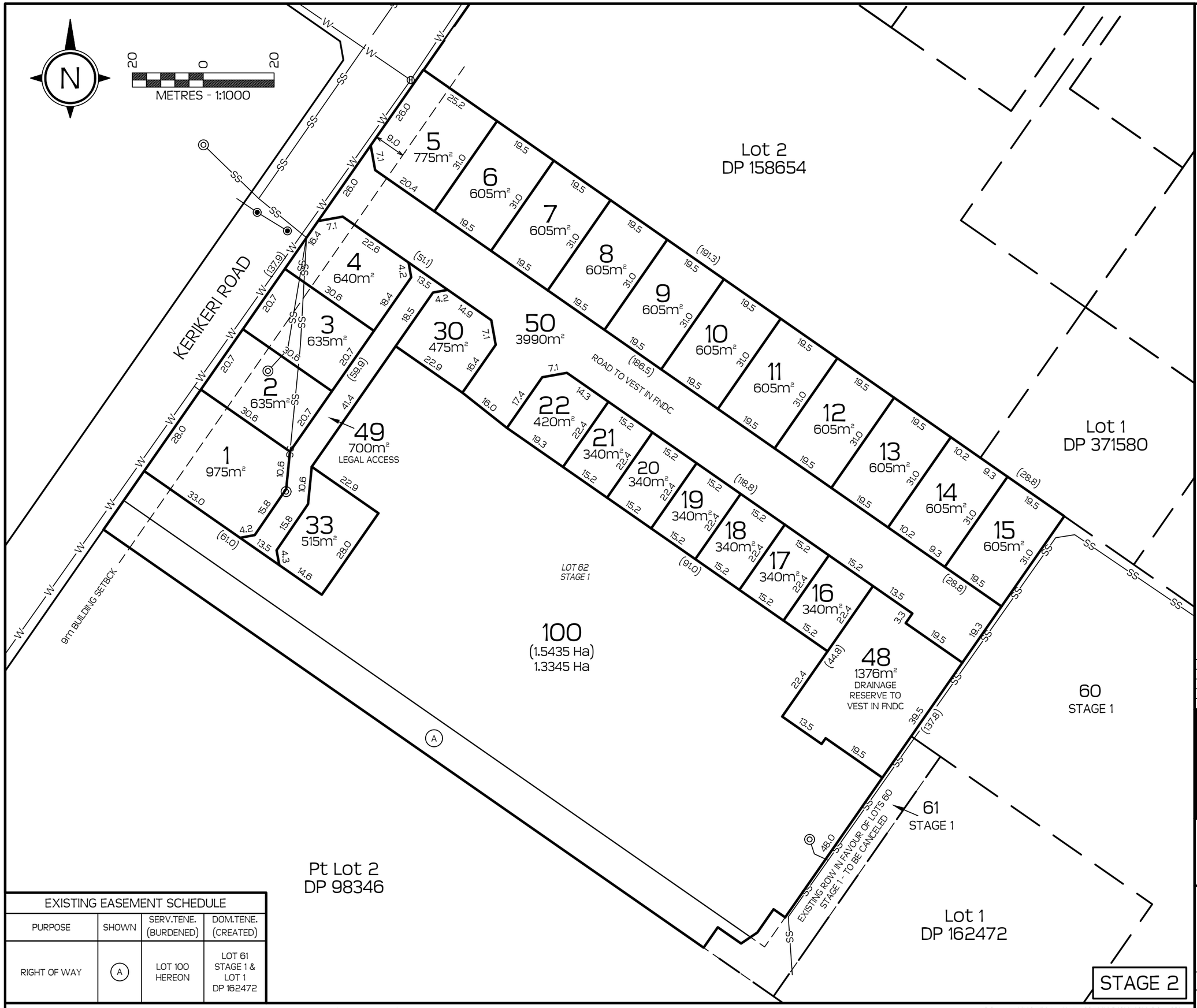

EXISTING EASEMENT SCHEDULE			
PURPOSE	SHOWN	SERV.TENE. (BURDENED)	DOM.TENE. (CREATED)
RIGHT OF WAY	(A)	LOT 100 HEREON	LOT 61 STAGE 1 & LOT 1 DP 162472

Date Plotted: 20/04/2022 File Path: P:\16000 - 16999\16655 - Traverse Ltd (Kerikeri Road)\Drawings\Scheme Plan\S16655 - Traverse - F.dwg

LOCAL AUTHORITY: FAR NORTH DISTRICT COUNCIL

CAUTION:

1. THIS DRAWING SHOULD NOT BE AMENDED MANUALLY.
2. AREAS & DIMENSIONS ARE APPROXIMATE ONLY AND ARE SUBJECT TO FINAL SURVEY.
3. THE VENDOR & PURCHASER MUST CONTACT THE SURVEYOR IF SALE & PURCHASE AGREEMENTS ARE ENTERED INTO USING THIS PLAN.
4. SERVICES MUST NOT BE POSITIONED USING THIS PLAN.
5. DO NOT SCALE OFF DRAWINGS.
6. THIS PLAN IS COPYRIGHT TO REYBURN & BRYANT (1999) LIMITED.
7. DESIGNED BY REYBURN & BRYANT - WHANGAREI - NEW ZEALAND
8. 04m 2014-2016 RURAL AERIAL SOURCED FROM AERIAL SURVEYS LTD INFORMATION AVAILABLE ON LINZ DATA SERVICE.
9. 2020 1m LiDAR CONTOUR INFORMATION COURTESY OF THE NRC.
10. BOUNDARIES SOURCED FROM QUICKMAP. COORDINATES IN TERMS OF MOUNT EDEN 2000.

PROPOSED CANCELLATION OF CONDITIONAL EASEMENTS

PURSUANT TO SECTION 243(e) OF THE RMA 1991, THE CONDITIONS AS TO THE CREATION OF:

THE RIGHT OF WAY MARKED 'A' ON STAGE 1; OVER LOT 62 STAGE 1; IS TO BE CANCELLED AS IT RELATES TO LOT 60 STAGE 1 &
THE RIGHT OF WAY, MARKED B ON STAGE 1, OVER LOT 61 STAGE 1 & APPURTENANT TO LOT 60 STAGE 1 & CREATED ON STAGE 1; IS TO BE REVOKED

REASON: LOT 60 STAGE 1 WILL NOW GAIN ACCESS FROM ROAD TO VEST (LOT 50).

PROPOSED AMALGAMATION CONDITION

PURSUANT TO SECTION 220 (1)(b)(iv) OF THE RMA 1991

THAT LOT 49 HEREON (LEGAL ACCESS) BE HELD AS TO SIX UNDIVIDED ONE-SIXTH SHARES BY THE OWNERS OF LOTS 1, 2, 3 & 33 HEREON (ONE SHARE EACH) AND LOT 100 HEREON (TWO SHARES) AS TENANTS IN COMMON IN THE SAID SHARES AND THAT INDIVIDUAL RECORDS OF TITLE BE ISSUED IN ACCORDANCE THEREWITH.

APPROVED PLAN

Planner: pkillalea
RC: 2220850
Date: 16/11/2022

TOTAL AREA: 3.4661 Ha
COMPRISED IN: RT NA692/358, NA93D/894

THIS SITE IS ZONED ' RESIDENTIAL ' AND THE BUILDING SETBACKS ARE THUS: 9m FROM KERIKERI ROAD BOUNDARIES, 1.2m FROM ALL OTHER BOUNDARIES WITH ONE ALLOWED AT 0m FOR A DISTANCE OF 10m ALONG THE BOUNDARY.

REV	DATE	DESCRIPTION
F	20.04.22	STAGING AMENDMENTS - RS/CC
E	23.11.21	LOT 41 & LOT 61 BOUNDARY ADJUSTMENT - RS/CC
A	01.10.21	FIRST ISSUE - RS/CC

REF. DATA:

reyburn & bryant
Ph: 09 438 3563
PO Box 191, Whangarei 0140
7 Selwyn Ave, Whangarei
www.reyburnandbryant.co.nz

CLIENT

TRAVERSE DEVELOPMENT LTD
373 & 377 KERIKERI ROAD, KERIKERI

TITLE

PROPOSED SUBDIVISION OF LOT 1 DP 25752 & PT LOT 2 DP 86081

DATE	APRIL 2022	SCALE	1:1000 @A3	
NO.	S16655	SHEET	3/5	Rev. F

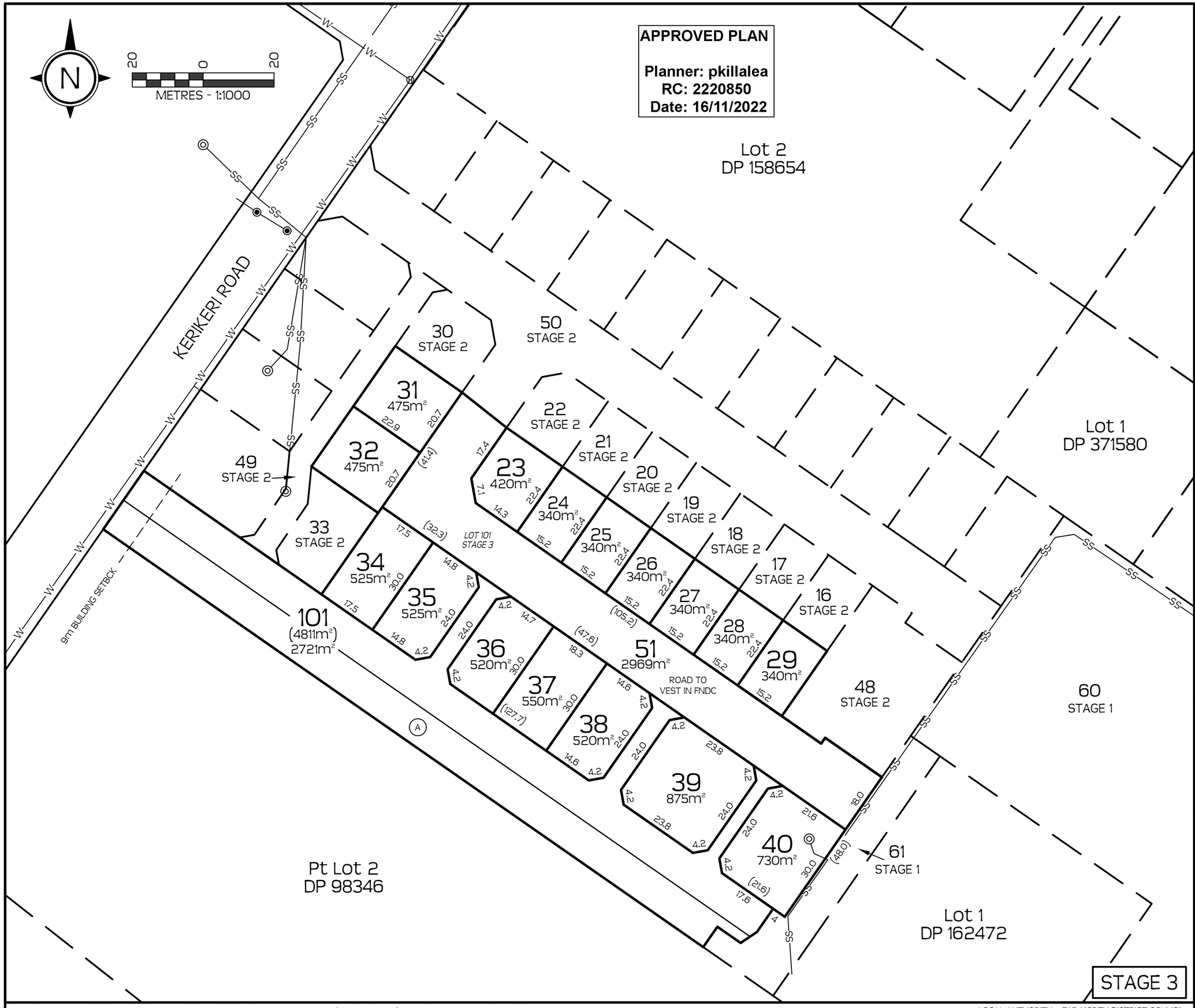

CAUTION:

1. THIS DRAWING SHOULD NOT BE AMENDED MANUALLY.
2. AREAS & DIMENSIONS ARE APPROXIMATE ONLY AND ARE SUBJECT TO FINAL SURVEY.
3. THE VENDOR & PURCHASER MUST CONTACT THE SURVEYOR IF SALE & PURCHASE AGREEMENTS ARE ENTERED INTO USING THIS PLAN.
4. SERVICES MUST NOT BE POSITIONED USING THIS PLAN.
5. DO NOT SCALE OFF DRAWINGS.
6. THIS PLAN IS COPYRIGHT TO REYBURN & BRYANT (1999) LIMITED.
7. DESIGNED BY REYBURN & BRYANT - WHANGAREI - NEW ZEALAND
8. 04m 2014-2016 RURAL AERIAL SOURCED FROM AERIAL SURVEYS LTD INFORMATION AVAILABLE ON LINZ DATA SERVICE.
9. 2020 1m LiDAR CONTOUR INFORMATION COURTESY OF THE NRC.
10. BOUNDARIES SOURCED FROM QUICKMAP. COORDINATES IN TERMS OF MOUNT EDEN 2000.

EXISTING EASEMENT SCHEDULE

PURPOSE	SHOWN	SERV.TENE. (BURDENED)	DOM.TENE. (CREATED)
RIGHT OF WAY	A	LOT 101 HEREON	LOT 61 HEREON & LOT 1 DP 162472

PROPOSED CANCELLATION OF AMALGAMATION CONDITION

PURSUANT TO SECTION 240 (4) OF THE RMA 1991

THE FAR NORTH DISTRICT COUNCIL RESOLVES TO CANCEL THE AMALGAMATION CONDITION IN RELATION TO THE TWO UNDIVIDED ONE-SIXTH SHARES OF LOT 49 STAGE 2 (LEGAL ACCESS) HELD BY THE OWNER OF LOT 100 STAGE 2.

REASON: THESE SHARES ARE TO BE REDISTRIBUTED AT THIS STAGE

PROPOSED AMALGAMATION CONDITION

PURSUANT TO SECTION 220 (1)(b)(iv) OF THE RMA 1991

REDISTRIBUTION OF SHARES: THAT LOT 49 STAGE 2 (LEGAL ACCESS) BE HELD AS TO TWO (EXISTING) UNDIVIDED ONE-SIXTH SHARES BY THE OWNERS OF LOT LOT 101 HEREON AS TENANTS IN COMMON IN THE SAID SHARES AND THAT INDIVIDUAL RECORDS OF TITLE BE ISSUED IN ACCORDANCE THEREWITH.

TOTAL AREA: 1.5435 Ha
COMPRISED IN: RT NA692/358, NA93D/894

THIS SITE IS ZONED ' RESIDENTIAL ' AND THE BUILDING SETBACKS ARE THUS: 9m FROM KERIKERI ROAD BOUNDARIES, 1.2m FROM ALL OTHER BOUNDARIES WITH ONE ALLOWED AT 0m FOR A DISTANCE OF 10m ALONG THE BOUNDARY.

REV	DATE	DESCRIPTION
F	20.04.22	STAGING AMENDMENTS - RS/CC
E	23.11.21	LOT 41 & LOT 61 BOUNDARY ADJUSTMENT - RS/CC
A	01.10.21	FIRST ISSUE - RS/CC

REF. DATA:

reyburn & bryant
Ph: 09 438 3563
PO Box 191, Whangarei 0140
7 Selwyn Ave, Whangarei
www.reyburnandbryant.co.nz

CLIENT

TRAVERSE DEVELOPMENT LTD
373 & 377 KERIKERI ROAD, KERIKERI

TITLE

PROPOSED SUBDIVISION OF LOT 1 DP 25752 & PT LOT 2 DP 86081

DATE	APRIL 2022	SCALE	1:1000 @A3	
NO.	S16655	SHEET	4/5	Rev. F

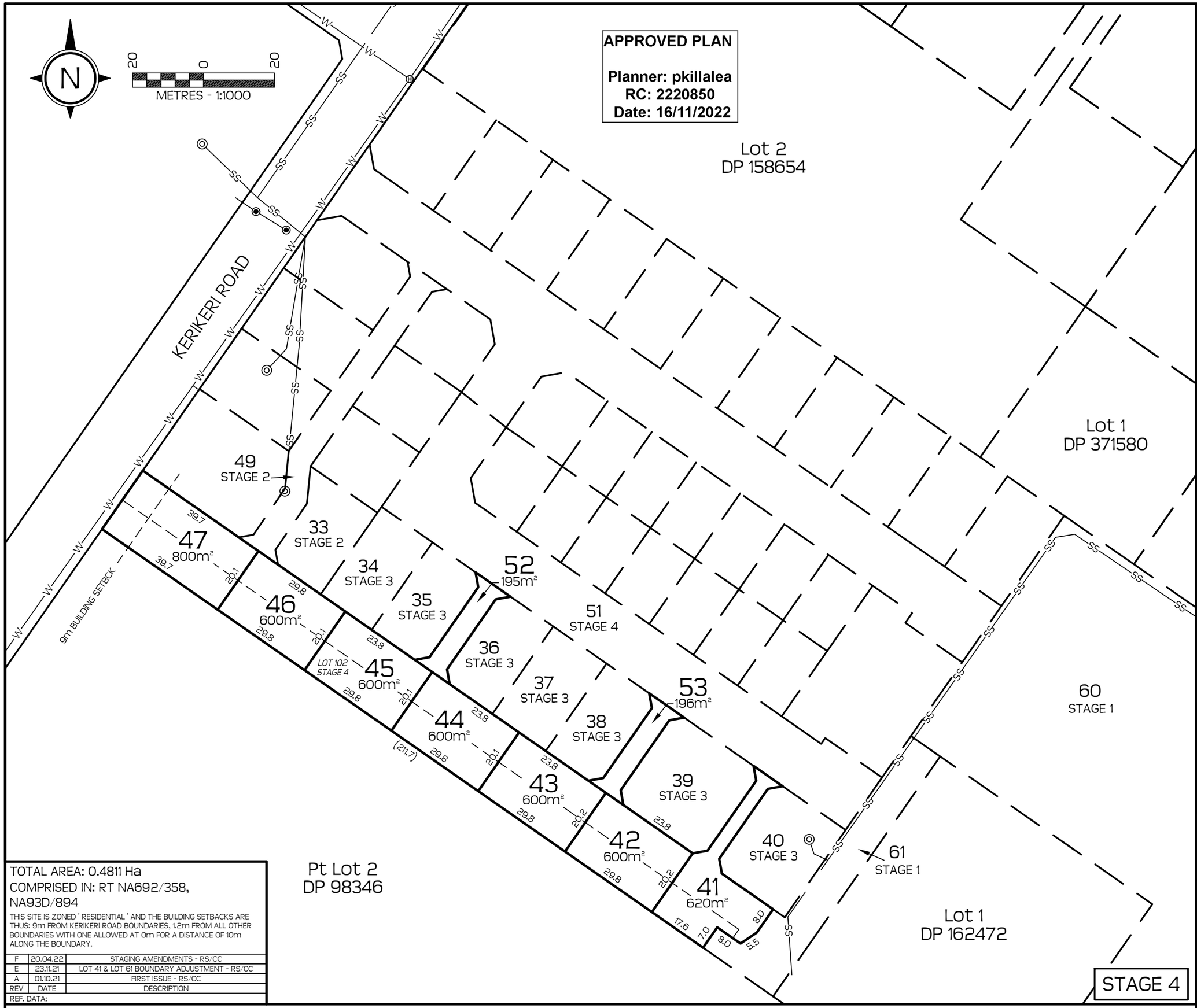

TOTAL AREA: 0.4811 Ha
COMPRISED IN: RT NA692/358, NA93D/894

THIS SITE IS ZONED ' RESIDENTIAL ' AND THE BUILDING SETBACKS ARE THUS: 9m FROM KERIKERI ROAD BOUNDARIES, 1.2m FROM ALL OTHER BOUNDARIES WITH ONE ALLOWED AT 0m FOR A DISTANCE OF 10m ALONG THE BOUNDARY.

REV	DATE	DESCRIPTION
F	20.04.22	STAGING AMENDMENTS - RS/CC
E	23.11.21	LOT 41 & LOT 61 BOUNDARY ADJUSTMENT - RS/CC
A	01.10.21	FIRST ISSUE - RS/CC

REF. DATA:

Date Plotted: 20/04/2022 File Path: P:\16000 - 16999\16655 - Traverse Ltd (Kerikeri Road)\Drawings\Scheme Plan\S16655 - Traverse - F.dwg

LOCAL AUTHORITY: FAR NORTH DISTRICT COUNCIL

CAUTION:

1. THIS DRAWING SHOULD NOT BE AMENDED MANUALLY.
2. AREAS & DIMENSIONS ARE APPROXIMATE ONLY AND ARE SUBJECT TO FINAL SURVEY.
3. THE VENDOR & PURCHASER MUST CONTACT THE SURVEYOR IF SALE & PURCHASE AGREEMENTS ARE ENTERED INTO USING THIS PLAN.
4. SERVICES MUST NOT BE POSITIONED USING THIS PLAN.
5. DO NOT SCALE OFF DRAWINGS.
6. THIS PLAN IS COPYRIGHT TO REYBURN & BRYANT (1999) LIMITED.
7. DESIGNED BY REYBURN & BRYANT - WHANGAREI - NEW ZEALAND
8. 04m 2014-2016 RURAL AERIAL SOURCED FROM AERIAL SURVEYS LTD INFORMATION AVAILABLE ON LINZ DATA SERVICE.
9. 2020 1m LiDAR CONTOUR INFORMATION COURTESY OF THE NRC.
10. BOUNDARIES SOURCED FROM QUICKMAP. COORDINATES IN TERMS OF MOUNT EDEN 2000.

PROPOSED CANCELLATION OF CONDITIONAL EASEMENTS

PURSUANT TO SECTION 243 (e) OF THE RMA 1991,
THE CONDITIONS AS TO THE CREATION OF:

THE RIGHT OF WAY MARKED 'A' ON STAGE 3, OVER LOT 101 STAGE 3 & APPURTENANT TO LOT 61 STAGE 1 & LOT 1 DP 162472 & CREATED ON STAGE 1; IS TO BE REVOKED

REASON: LOT 61 STAGE 1 & LOT 1 DP 162472 IS SERVED FROM ROW & WILL NOW GAIN ACCESS FROM ROAD TO VEST (LOT 51).

PROPOSED CANCELLATION OF AMALGAMATION CONDITION

PURSUANT TO SECTION 240 (4) OF THE RMA 1991

THE FAR NORTH DISTRICT COUNCIL RESOLVES TO CANCEL THE AMALGAMATION CONDITION IN RELATION TO THE TWO UNDIVIDED ONE-SIXTH SHARES OF LOT 49 STAGE 2 (LEGAL ACCESS) HELD BY THE OWNER OF LOT 101 STAGE 3.

REASON: THESE SHARES ARE TO BE REDISTRIBUTED AT THIS STAGE

PROPOSED AMALGAMATION CONDITION

PURSUANT TO SECTION 220 (1)(b)(iv) OF THE RMA 1991

REDISTRIBUTION OF SHARES: THAT LOT 49 STAGE 2 (LEGAL ACCESS) BE HELD AS TO TWO (EXISTING) UNDIVIDED ONE-SIXTH SHARES BY THE OWNERS OF LOTS 46 & 47 HEREON (ONE SHARE EACH) AS TENANTS IN COMMON IN THE SAID SHARES,
&
THAT LOT 52 HEREON (LEGAL ACCESS) BE HELD AS TO TWO UNDIVIDED ONE-HALF SHARES BY THE OWNERS OF LOTS 44 & 45 HEREON (ONE SHARE EACH) AS TENANTS IN COMMON IN THE SAID SHARES,
&
THAT LOT 53 HEREON (LEGAL ACCESS) BE HELD AS TO TWO UNDIVIDED ONE-HALF SHARES BY THE OWNERS OF LOTS 42 & 43 HEREON (ONE SHARE EACH) AS TENANTS IN COMMON IN THE SAID SHARES,
AND THAT INDIVIDUAL RECORDS OF TITLE BE ISSUED IN ACCORDANCE THEREWITH.

reyburn & bryant
Ph: 09 438 3563
PO Box 191, Whangarei 0140
7 Selwyn Ave, Whangarei
www.reyburnandbryant.co.nz

CLIENT

TRAVERSE DEVELOPMENT LTD
373 & 377 KERIKERI ROAD, KERIKERI

TITLE

PROPOSED SUBDIVISION OF LOT 1 DP 25752 & PT LOT 2 DP 86081

DATE	APRIL 2022	SCALE	1:1000 @A3
NO.	S16655	SHEET 5/5	Rev. F

RECORD OF TITLE
UNDER LAND TRANSFER ACT 2017
FREEHOLD

Historical Search Copy

R.W. Muir
Registrar-General
of Land

Constituted as a Record of Title pursuant to Sections 7 and 12 of the Land Transfer Act 2017 - 12 November 2018

Identifier **NA692/358** **Cancelled**

Land Registration District **North Auckland**

Date Issued 30 August 1937

Prior References
NA670/149

Estate Fee Simple

Area 3.0379 hectares more or less

Legal Description Lot 1 Deposited Plan 25752

Original Registered Owners

Hugh Graeme Ritchie, Simon Hugh Ritchie, William Wilson and Angela Sophie Anna Pearson

---

Interests

Appurtenant hereto are water rights created by Transfer 570870

Subject to a water right over part created by Transfer 570871 - 14.3.1956 at 2.22 pm

5502844.1 Transmission to Hugh Graeme Ritchie, Simon Hugh Ritchie and Angela Sophie Anna Pearson - 27.2.2003 at 9:00 am

5502844.2 Transfer to Hugh Graeme Ritchie, Simon Hugh Ritchie, Christopher David Ritchie and Colin Charles McKay - 27.2.2003 at 9:00 am

9892868.1 Transfer to Hugh Graeme Ritchie, Christopher David Ritchie, Wilson McKay Trustee Company Limited and Christopher John Hugh Ritchie - 11.11.2014 at 4:00 pm

11821246.1 Transfer to Hugh Graeme Ritchie, Wilson McKay Trustee Company Limited, Christopher John Hugh Ritchie, George Ritchie and Karin Sophie Reinholt - 4.8.2020 at 4:15 pm

11822191.1 Transmission to Wilson McKay Trustee Company Limited, Christopher John Hugh Ritchie, George Ritchie and Karin Sophie Reinholt as survivor(s) - 5.8.2020 at 12:24 pm

12477472.1 Transfer to Traverse Limited - 30.6.2022 at 2:06 pm

12477472.2 Mortgage to David John Kingdom - 30.6.2022 at 2:06 pm

12477472.3 Mortgage to Rex Stanley Rackham and Kenneth Edgar Rackham - 30.6.2022 at 2:06 pm

12674566.1 Discharge of Mortgage 12477472.2 - 20.4.2023 at 2:43 pm

12674566.2 Discharge of Mortgage 12477472.3 - 20.4.2023 at 2:43 pm

12674566.3 Surrender of the easements created by Transfer 570871 - 20.4.2023 at 2:43 pm

12674566.7 Records of Title issued - 20.4.2023 at 2:43 pm

Legal Description	Title
Part Lot 62 Deposited Plan 584829	1101259

CANCELLED

REGISTER

[Land and Deeds—4.
[FORM B.

NEW ZEALAND.

Reference: Vol. 670, Folio 149
Transfer No. 289156
Application No.
Order for N/C No.

Register-book, Vol. 692, folio 358.

692/358

CERTIFICATE OF TITLE UNDER LAND TRANSFER ACT.

This Certificate, dated the thirtieth day of August, one thousand nine hundred and thirty-seven under the hand and seal of the District Land Registrar of the Land Registration District of AUCKLAND witnesseth that HERBERT PERCY RITCHIE of Kerikeri, Gentleman,

is seised of an estate in fee-simple (subject to such reservations, restrictions, encumbrances, liens, and interests as are notified by memorial under written or endorsed hereon, subject also to any existing right of the Crown to take and lay off roads under the provisions of any Act of the General Assembly of New Zealand) in the land hereinafter described, as the same is delineated by the plan hereon bordered green, be the several admeasurements a little more or less, that is to say: All that parcel of land containing seven acres two roods one and one tenth perches more or less situated in Block XI of the Kerikeri Survey District being Lot one (1) on a plan deposited in the Land Registry Office at Auckland as No.25752 and being portion of Old Land Claim No.3.

AUCKLAND DISTRICT LAND REGISTRAR NEW ZEALAND

W. Williams
Assistant ~~District Land Registrar~~.

EQUIVALENT METRIC AREA IS 3.0379 ha
3·0379 ha

Mortgage No.243883 Herbert Percy Ritchie to the Bank of New Zealand. Produced 30th August 1937 at 10.41a.m.

DISCHARGED 28/3/1962

W. Williams
Asst. L.R.

Appurtenant hereto is a grant of water easement over Lots 1 and 2 plan 39242 ~~Lot 2 on plan 24835~~ (cancelled by Transfer 570970

A.L.R.

Transfer 570871 being a grant of water easement ~~to part Lot 1 Plan 24835 to be~~ appurtenant to Lot 2 Plan 25752 (C/T 890/279) Herbert Percy Ritchie to Rex Jack Pleasants of ~~Kerikeri~~ Kerikeri accountant. Produced 11/3/1958 at 2.22 p.m. (with consent of mortgagee under mortgage 243883)

A.L.R.

B 99360 Transmission to Herbert Arthur Ritchie of Kerikeri, orchardist, as executor. Entered 14.2.1964 at 11.42 a.m.

A.L.R.

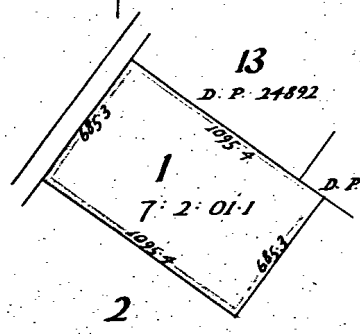

Scale: 4 Chains to an inch

THIS REPRODUCTION (ON A REDUCED SCALE) CERTIFIED TO BE A TRUE COPY OF THE ORIGINAL REGISTER FOR THE PURPOSES OF SECTION 215A LAND TRANSFER ACT 1952.
L.G. Harman
D.L.R.

OVER..

692/358

B006624.1 Notice pursuant to Section 25 Public Works Amendment Act 1975 of the constitution of the Kerikeri Irrigation District - 23.11.1981 at 12.00 o'c

Release D 11 1995 C918547 A.L.R.

A.L.R.

B.077059.1 Transfer to Herbert Arthur Ritchie of Kerikeri orchardist - 18.6.1982 at 11.01 o'c

A.L.R.

B.077059.2 Transfer to Hugh Graeme Ritchie of Kerikeri United Nations official - 18.6.1982 at 11.01 o'c

A.L.R.

B.507965.2 Mortgage to Wilson Wright Solicitors Nominee Company Limited - 19.2.1986 at 11.35 oc.

A.L.R.

B.536438.2 Mortgage to Wilson Wright Solicitors Nominee Company Limited- 15.5.1988 at 1.18 o'c

DISCHARGED A.L.R.

B552178.1

A.L.R.

D199325.1 Transfer to Hugh Graeme Ritchie, Florence May Ritchie, Simon Hugh Ritchie and William Wilson 29.9.1997 at 3.18.

for DLR

D548210.1 Transmission to Hugh Graeme Ritchie, Simon Hugh Ritchie and William Wilson as survivors

D548210.2 Transfer to Hugh Graeme Ritchie, Simon Hugh Ritchie, William Wilson and Angela Sophie Anna Pearson

Both 10.10.2000 at 3.38

for RGL

RECORD OF TITLE
UNDER LAND TRANSFER ACT 2017
FREEHOLD

Historical Search Copy

R.W. Muir
Registrar-General
of Land

Constituted as a Record of Title pursuant to Sections 7 and 12 of the Land Transfer Act 2017 - 12 November 2018

Identifier **NA93D/894** **Cancelled**

Land Registration District **North Auckland**

Date Issued 23 September 1994

Prior References
NA43D/698

Estate Fee Simple

Area 6.9309 hectares more or less

Legal Description Part Lot 2 Deposited Plan 86081

Original Registered Owners

Donald Lindsay McGowan, Evelyn Jean McGowan and Lewis Thomas Grant

---

Interests

Fencing Agreement in Transfer 265009 (affects part formerly 20B/885)

Fencing Agreement in Transfer 442202 (affects part formerly 20B/885)

Appurtenant as to part (formerly in CT NA890/273) is a water right created by Transfer 570871

Subject to a right of way, and rights to transmit electricity, telecommunications and convey water over part marked A on Plan 162472 created by Transfer C810486.3 - 13.2.1995 at 2.31 pm

The easements created by Transfer C810486.3 are subject to Section 243 (a) Resource Management Act 1991

Appurtenant hereto are rights to convey water and electric power created by Transfer C810486.4 - 13.2.1995 at 2.31 pm

C895524.1 Variation of terms of Easement C810486.4 - 13.9.1995 at 2.38 pm

D607624.3 Mortgage to ASB Bank Limited - 25.5.2001 at 3.22 pm

10218431.1 Discharge of Mortgage D607624.3 - 20.10.2015 at 2:58 pm

10218431.2 Transfer to Bradley Rae Davies, Robyn Davies and Jonathan Shane Marshall (1/2 share) and Robyn Davies, Bradley Rae Davies and Jonathan Shane Marshall (1/2 share) - 20.10.2015 at 2:58 pm

10218431.3 Mortgage to Donald Lindsay McGowan, Evelyn Jean McGowan and Lewis Thomas Grant - 20.10.2015 at 2:58 pm

12087799.1 Departmetnal dealing correcting the memorials by adding the memorial for Transfer 570870 - 14.4.2021 at 9:22 am

Appurtenant as to part (formerly in CT NA890/273) is a water right created by Transfer 570870 - 14.3.1956 at 2:20 pm

12192230.1 Transfer of Mortgage 10218431.3 to Donald Lindsay McGowan and Evelyn Jean McGowan - 29.7.2021 at 2:45 pm

12192230.2 Discharge of Mortgage 10218431.3 - 29.7.2021 at 2:45 pm

12682304.1 Departmental dealing correcting the easement reference for variation C895524.1 from C810486.4 to C810486.3 - 6.3.2023 at 9:40 am

12674566.3 Surrender of the easements created by Transfer 570871 - 20.4.2023 at 2:43 pm

12674566.4 Surrender of the easements created by Transfer C810486.3 - 20.4.2023 at 2:43 pm

12674566.5 Transfer of part Lot 62 DP 584829 to Traverse Limited - 20.4.2023 at 2:43 pm

12674566.6 Transfer part Lot 61 DP 584829 to Paul Simon Eyres and Claire Nicola Eyres - 20.4.2023 at 2:43 pm

12674566.7 Records of Title issued - 20.4.2023 at 2:43 pm

Legal Description	**Title**
Lot 60 Deposited Plan 584829	1101257
Lot 61 Deposited Plan 584829	1101258
Part Lot 62 Deposited Plan 584829	1101259

CANCELLED

References
Prior C/T 43D/698

Transfer No.
N/C. Order No. C.658335.3

Land and Deeds 69

REGISTER

No. 93D/894

CERTIFICATE OF TITLE UNDER LAND TRANSFER ACT

This Certificate dated the 23rd day of September one thousand nine hundred and ninety-four under the seal of the District Land Registrar of the Land Registration District of NORTH AUCKLAND

WITNESSETH that ROSS JOHN MCGREGOR of Kerikeri orchardist and ELIZABETH ANNE MCGREGOR his wife are

is seised of an estate in fee-simple (subject to such reservations, restrictions, encumbrances, liens, and interests as are notified by memorial underwritten or endorsed hereon) in the land hereinafter described, delineated with bold black lines on the plan hereon, be the several admeasurements a little more or less, that is to say: All that parcel of land containing 6.9309 hectares more or less being part Lot 2 Deposited Plan 86081 and being part Old Land Claim No.3

DISTRICT LAND REGISTRAR NORTH AUCKLAND NEW ZEALAND

Assistant Land Registrar

Interests at Date of Issue:

bmw

Fencing agreement in Transfers 265009 and 442202 (affects part formerly 20B/885)

Appurtenant as to part (formerly in CT 890/273) is a water easement over part Lots 34 and 35 Plan 21955 (CsT 15D/990 and 24D/508) created by Transfer 570870. Part Lot 1 Plan 25752 (CT 692/358) created by Transfer 570871

B.006624.1 Notice pursuant to Section 25 Public Works Amendment Act 1976 of the constitution of the Kerikeri Irrigation District - 23.11.1981 at 12.00 o'c

C.628792.2 Mortgage to Westpac Banking Corporation - 21.11.1994 at 1.38 o'c

A.L.R.

Subject to Section 243 (c) Resource Management Act 1991 requiring that the conditional easements specified on Plan 162472 be granted or reserved prior to the disposition of the within land

A.L.R.

C.675630.1 CAVEAT BY DONALD LINDSAY MCGOWAN AND EVELYN JEAN MCGOWAN - 9.11.1994 at 2.45 o'c

WITHDRAWN 13/2/95 A.L.R.

A.L.R.

over.....

Measurements are Metric

No. 93D/894

CERTIFICATE OF TITLE No. 1

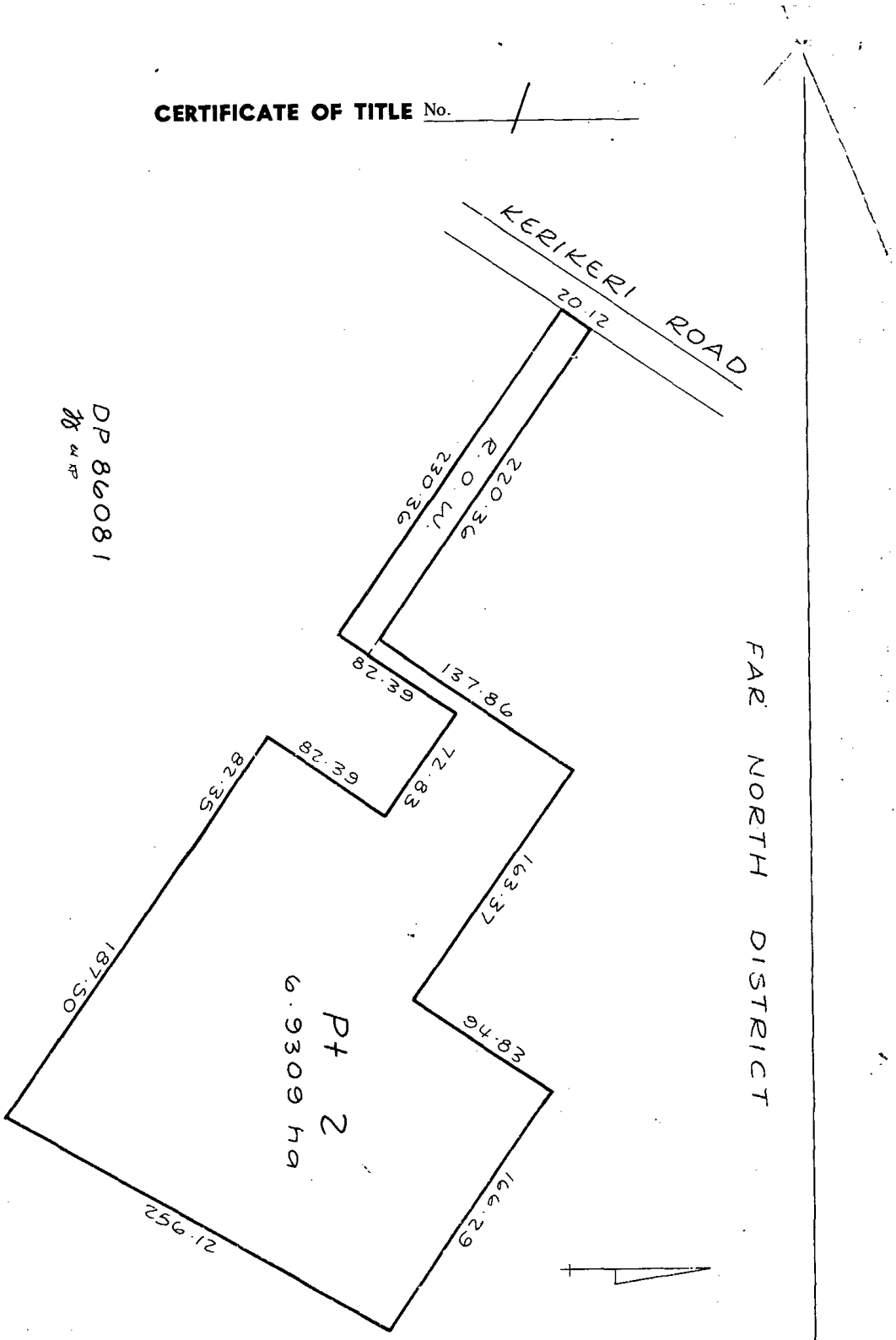

93D/894

C.810486.3 Transfer to Donald Lindsay McGowan bank general manager and Evelyn Jean McGowan legal executive both of Auckland as tenants in common in equal shares but reserving a right of way, right to transmit electricity, telecommunications and right to convey water easements over the part within land shown marked 'A' on Plan 162472 appurtenant to Lot 1 Plan 162472 (CT 98A/89.) - 13.2.1995 at 2.31 o'c

A.L.R.

The above easements created by Transfer C.810486.3 are subject to Section 243 (a) Resource Management Act 1991

A.L.R.

Appurtenant hereto is a right to convey water and a right to convey electric power easements over the whole of Lot 1 Plan 162472 (CT 98A/89) following the general direction of the easement area marked 'A' on Plan 162472 created by Transfer C.810486.4

A.L.R.

C.895524.1 Variation of terms of Easement C.810486.4 - 13.9.1995 at 2.38 oc

A.L.R.

D175124.1 Mortgage to ASB Bank Limited 24.7.1997 at 2.2

DISCHARGED 25/5/01 FOR RGL

for DLR

D607624.2 Transfer to Donald Lindsay McGowan, Evelyn Jean McGowan and Lewis Thomas Grant

D607624.3 Mortgage to ASB Bank Limited

All 25.5.2001 at 3.22

for RGL

RECORD OF TITLE
UNDER LAND TRANSFER ACT 2017
FREEHOLD

Historical Search Copy

R.W. Muir
Registrar-General
of Land

Constituted as a Record of Title pursuant to Sections 7 and 12 of the Land Transfer Act 2017 - 12 November 2018

Identifier **NA98A/89** **Cancelled**

Land Registration District **North Auckland**

Date Issued 23 September 1994

Prior References
NA43D/698

Estate Fee Simple

Area 6000 square metres more or less

Legal Description Lot 1 Deposited Plan 162472

Original Registered Owners

Rexley Blake Hunton and Valerie Elaine Hunton

Interests

Appurtenant hereto are water rights created by Transfer 570870

Appurtenant hereto is a water right created by Transfer 570871

C658335.2 Resolution pursuant to Section 321 (3) (c) Local Government Act 1974 - 23.9.1994 at 2.04 pm

Appurtenant hereto is a right of way and rights to transmit electricity and convey water, and a telecommunications right created by Transfer C810486.3 - 13.2.1995 at 2.31 pm

The easements created by Transfer C810486.3 are subject to Section 243 (a) Resource Management Act 1991

Subject to rights to convey water and convey electric power over the whole of the within land following the general direction of the easement area marked A on DP 162472 created by Transfer C810486.4 - 13.2.1995 at 2.31 pm

C895524.1 Variation of the conditions of the easement created by Transfer C810486.4 - 13.9.1995 at 2.38 pm

8468755.1 Transfer to Paul Simon Eyres and Claire Nicola Eyres - 23.4.2010 at 2:03 pm

8468755.2 Mortgage to Westpac New Zealand Limited - 23.4.2010 at 2:03 pm

9248472.1 Discharge of Mortgage 8468755.2 - 27.11.2012 at 2:15 pm

12682304.1 Departmental dealing correcting the easement reference for variation C895524.1 from C810486.4 to C810486.3 - 6.3.2023 at 9:40 am

12674566.3 Surrender of the easements created by Transfer 570871 - 20.4.2023 at 2:43 pm

12674566.4 Surrender of the easements created by Transfer C810486.3 - 20.4.2023 at 2:43 pm

12674566.7 Record of Title 1101258 issued - 20.4.2023 at 2:43 pm.

CANCELLED

No. 98A/89

References
Prior C/T 43D/698

Transfer No.
N/C. Order No. C.658335.3

Land and Deeds 69

REGISTER

CERTIFICATE OF TITLE UNDER LAND TRANSFER ACT

This Certificate dated the 23rd day of September one thousand nine hundred and ninety-four under the seal of the District Land Registrar of the Land Registration District of NORTH AUCKLAND

WITNESSETH that ROSS JOHN MCGREGOR of Kerikeri orchardist and ELIZABETH ANNE MCGREGOR his wife are

is seised of an estate in fee-simple (subject to such reservations, restrictions, encumbrances, liens, and interests as are notified by memorial underwritten or endorsed hereon) in the land hereinafter described, delineated with bold black lines on the plan hereon, be the several admeasurements a little more or less, that is to say: All that parcel of land containing 6000 square metres more or less being Lot 1 Deposited Plan 162472 and being part Old Land Claim No.3

DISTRICT LAND REGISTRAR NORTH AUCKLAND NEW ZEALAND

Assistant Land Registrar

bmw

Interests at Date of Issue:

Appurtenant hereto is a water easement over part Lots 34 and 35 Plan 21955 (CsT 15D/990 and 24D/508) created by Transfer 570870, Part Lot 1 Plan 25752 (CT 692/358) created by Transfer 570871

B.006624[illegible] Notice pursuant to Section 25 Public Works Amendment Act 1976 of the constitution of the Kerikeri Irrigation District - 23.11.1981 at 12.00 o'c

Released 09.11.1995 C918547 CANCELLED 13.9.1995 A.L.R.

C.628795.2 Mortgage to Westpac Banking Corporation - 2[illegible].1994 at 12.38 o'c

A.L.R.

C.658335.2 Resolution under Section 321 (3) (c) Local Government Act 1974 - 23.9.1994 at 2.04 o'c

A.L.R.

Subject to Section 243 (c) Resource Management Act 1991 requiring that the conditional easements specified on Plan 162472 be granted or reserved prior to the disposition of the within land

CANCELLED

A.L.R.

Appurtenant hereto is a right of way, right to transmit electricity, telecommunications and right to convey water easements over part Lot 2 Plan 86081 (CT 93D/894) shown marked 'A' on Plan 162472 created by Transfer C.810486.3

A.L.R.

The above easements created by Transfer C.810486.3 are subject to Section 243 (a) Resource Management Act 1991

A.L.R.

over.....

Measurements are Metric

No. 98A/89

CERTIFICATE OF TITLE No.

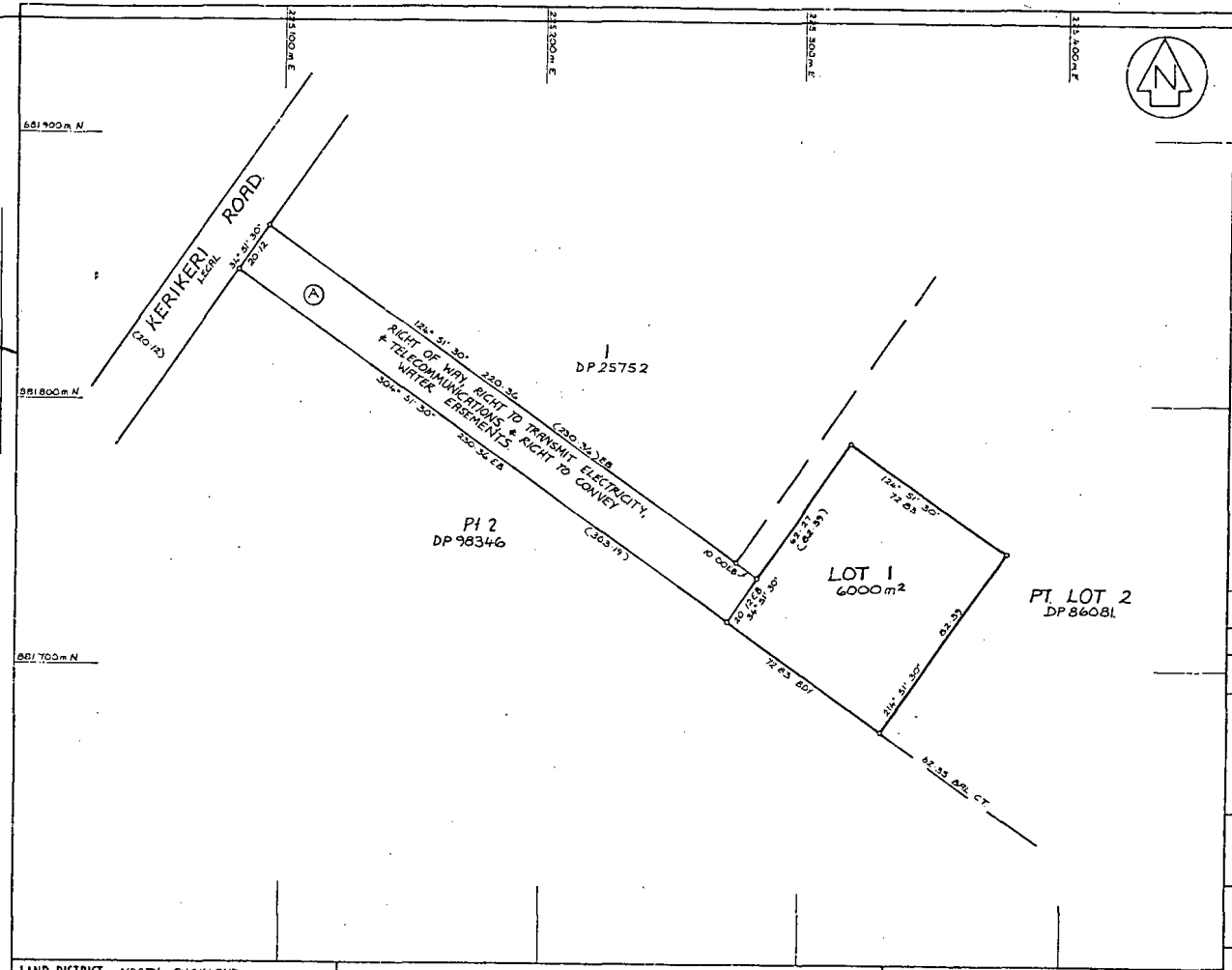

Approvals

R.J. McGregor

REGISTERED OWNERS :- R.J. & E.R. McGREGOR.

APPROVED PURSUANT TO SECTION 223 OF THE RESOURCE MANAGEMENT ACT 1991 ON THE 28th DAY OF June 1994 SUBJECT TO THE GRANTING OR RESERVING OF THE EASEMENTS SET OUT IN THE MEMORANDUM HEREON.

THE COMMON SEAL OF THE FAR NORTH DISTRICT COUNCIL IS AFFIXED HERETO IN THE PRESENCE OF:

THE COMMON SEAL OF THE FAR NORTH DISTRICT COUNCIL

AUTHORISED OFFICER (UNDER DELEGATED AUTHORITY)

MEMORANDUM OF EASEMENTS

PURPOSE	SERVIENT TENEMENT	SHOWN	DOMINANT TENEMENT
RIGHT OF WAY RIGHT TO TRANSMIT ELECTRICITY & TELECOMMUNICATION & RIGHT TO CONVEY WATER.	PART LOT 2 DP 86081	A	LOT 1 HEREON

NEW CT ALLOCATED.
LOT 1 :- 98A/89

Total Area 6000m²

Comprised in CT 43D/698 (PT)

I, Robert John Donaldson

Registered Surveyor and holder of an annual practising certificate (or who may act as a registered surveyor pursuant to section 25 of the Survey Act 1986) hereby certify that this plan has been made from surveys executed by me or under my directions, that both plan and survey are correct and have been made in accordance with the Survey Regulations 1972 or any regulations made in substitution thereof

Dated at Kerikeri this 23rd day of June 1994 Signature R.J. Donaldson

Field Book # Traverse Book #

Reference Plans

Examined R.J. Donaldson Correct J.S. Hunkin

Approved as to Survey

11 10 94 Chief Surveyor

Deposited this 23rd day of September 1994

District Land Registrar

File 2412

Received Instructions 1 JUL 1994

DP 162472

LAND DISTRICT NORTH AUCKLAND

SURVEY BLK. & DIST. XI KERIKERI

NZMS 261 SHT RECORD MAP No Kerikeri 13 P05/6.2

PLAN OF LOT 1 BEING A SUBDIVISION OF LOT 2 DP 86081.

TERRITORIAL AUTHORITY FAR NORTH DISTRICT

Surveyed by R.J. DONALDSON & ASSOC.

Scale 1:1000 Date JUNE 1994

Published by Lithocraft

W.A. ROBERTSON DIRECTOR GENERAL/SURVEYOR GENERAL DEPARTMENT OF SURVEY AND LAND INFORMATION NEW ZEALAND

Approved DIRECTOR PORPAROOO 00847/FORM 215

98A/89

C.810486.4 Transfer granting a right to convey water and a right to convey electric power easements over the whole of the within land following the general direction of the easement area marked 'A' on Plan 162472 appurtenant to part Lot 2 Plan 86081 (CT 93D/894) - 13.2.1995 at 2.31 o'c

A.L.R.

C.849526.1 Mortgage to Westpac Banking Corporation - 1.6.1995 at 12.10 o'c

A.L.R.

C.895524.1 Variation of terms of Easement C.810486.4 - 13.9.1995 at 2.38 oc

A.L.R.

D.011125.2 Transfer to David John Andrews and Lois June O'Brien both of Auckland retired as tenants in common in equal shares - 24.6.1996 at 2.32 oc

A.L.R.

D292187.1 Transfer to Rexley Blake Hunton and Valerie Elaine Hunton 15.7.1998 at 3.17

for DLR

RECORD OF TITLE
UNDER LAND TRANSFER ACT 2017
FREEHOLD

Search Copy

R.W. Muir
Registrar-General
of Land

Identifier **1156104**

Land Registration District **North Auckland**

Date Issued 29 July 2024

Prior References
1101259

Estate Fee Simple

Area 638 square metres more or less

Legal Description Lot 4 Deposited Plan 596768

Registered Owners
Traverse Limited

Interests

Appurtenant hereto is a water right created by Transfer 570870 - 14.3.1956 at 2:20 pm

Appurtenant hereto is a right to drain sewage created by Easement Instrument 12674566.8 - 20.4.2023 at 2:43 pm

The easements created by Easement Instrument 12674566.8 are subject to Section 243 (a) Resource Management Act 1991

12674566.10 Mortgage to David John Kingdom - 20.4.2023 at 2:43 pm

12674566.11 Mortgage to Rex Stanley Rackham and Kenneth Edgar Rackham - 20.4.2023 at 2:43 pm

12893937.1 Variation of Mortgage 12674566.11 - 31.1.2024 at 1:01 pm

12965271.5 Consent Notice pursuant to Section 221 Resource Management Act 1991 - 29.7.2024 at 4:43 pm

Land Covenant in Covenant Instrument 12965271.10 - 29.7.2024 at 4:43 pm

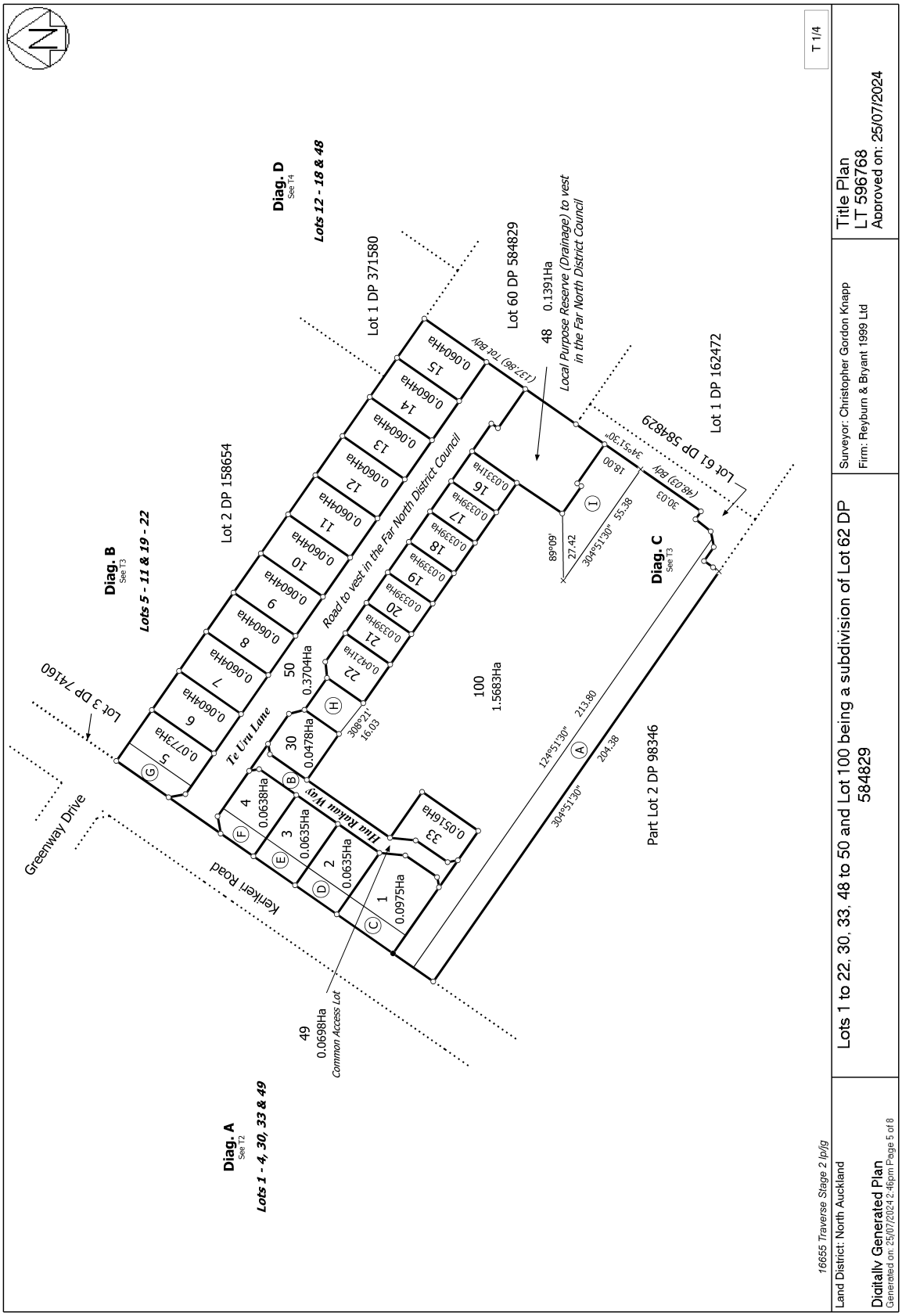
T 1/4
Diag. D
See T4
Lots 12 - 18 & 48
Lot 1 DP 371580
Lot 60 DP 584829
48 0.1391Ha
Local Purpose Reserve (Drainage) to vest in the Far North District Council
Lot 1 DP 162472
Lot 61 DP 584829
(137.88) Tot Bdy
(48.03) Bdy
34°51'30"
18.00
30.03
55.38
30°51'30"
27.42
89°09'
Diag. B
See T3
Lots 5 - 11 & 19 - 22
Lot 2 DP 158654
Road to vest in the Far North District Council
Diag. C
See T3
Lot 3 DP 74160
Te Uru Lane
50 0.3704Ha
100 1.5683Ha
308°21'
16.03
124°51'30"
213.80
204.38
30°51'30"
Part Lot 2 DP 98346
Greenway Drive
Kerikeri Road
Hine Rakau Way
30 0.0478Ha
4 0.0638Ha
3 0.0635Ha
2 0.0635Ha
1 0.0975Ha
33 0.0516Ha
49 0.0698Ha
Common Access Lot
Diag. A
See T2
Lots 1 - 4, 30, 33 & 49
16655 Traverse Stage 2 lp/jg
Land District: North Auckland
Digitally Generated Plan
Generated on: 25/07/2024 2:46pm Page 5 of 8
Lots 1 to 22, 30, 33, 48 to 50 and Lot 100 being a subdivision of Lot 62 DP 584829
Surveyor: Christopher Gordon Knapp
Firm: Reyburn & Bryant 1999 Ltd
Title Plan
LT 596768
Approved on: 25/07/2024

RECORD OF TITLE
UNDER LAND TRANSFER ACT 2017
FREEHOLD

Search Copy

R.W. Muir
Registrar-General
of Land

Identifier **1156105**

Land Registration District **North Auckland**

Date Issued 29 July 2024

Prior References

1101259

Estate Fee Simple

Area 773 square metres more or less

Legal Description Lot 5 Deposited Plan 596768

Registered Owners

Jason John Farac and Kelly-Anne Hampson

Interests

Appurtenant hereto is a water right created by Transfer 570870 - 14.3.1956 at 2:20 pm

Appurtenant hereto is a right to drain sewage created by Easement Instrument 12674566.8 - 20.4.2023 at 2:43 pm

The easements created by Easement Instrument 12674566.8 are subject to Section 243 (a) Resource Management Act 1991

12965271.5 Consent Notice pursuant to Section 221 Resource Management Act 1991 - 29.7.2024 at 4:43 pm

Land Covenant in Covenant Instrument 12965271.10 - 29.7.2024 at 4:43 pm

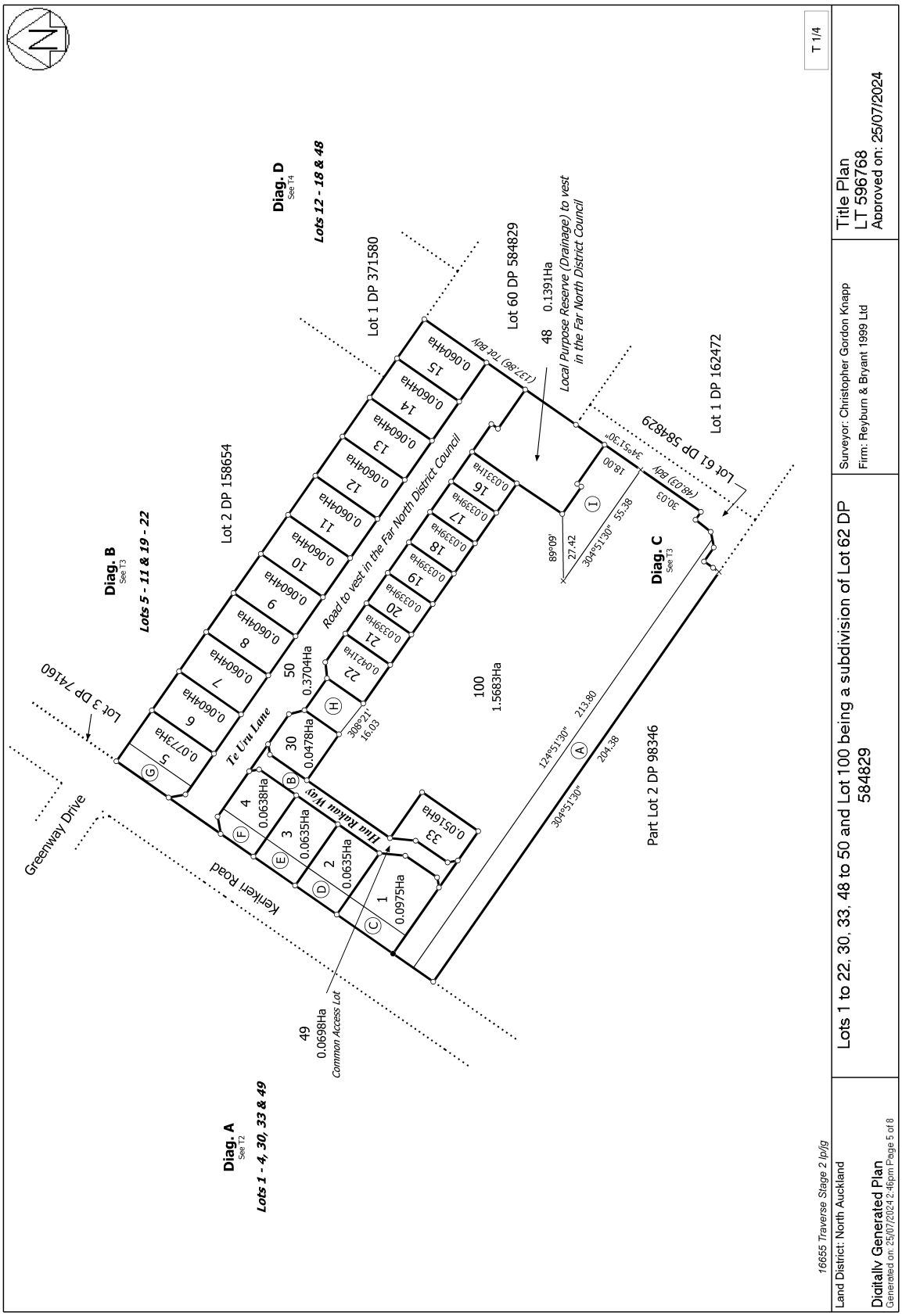
Diag. D
See T4
Lots 12 - 18 & 48
Lot 1 DP 371580
Lot 60 DP 584829
48 0.1391Ha
Local Purpose Reserve (Drainage) to vest in the Far North District Council
Lot 1 DP 162472
Lot 61 DP 584829
Lot 2 DP 158654
Diag. B
See T3
Lots 5 - 11 & 19 - 22
Road to vest in the Far North District Council
Lot 3 DP 74160
Te Uru Lane
50 0.3704Ha
100 1.5683Ha
Diag. C
See T3
Part Lot 2 DP 98346
Greenway Drive
Kerikeri Road
Hine Rakau Way
49 0.0698Ha
Common Access Lot
Diag. A
See T2
Lots 1 - 4, 30, 33 & 49
T 1/4
16655 Traverse Stage 2 lp/jg
Land District: North Auckland
Digitally Generated Plan
Generated on: 25/07/2024 2:46pm Page 5 of 8
Lots 1 to 22, 30, 33, 48 to 50 and Lot 100 being a subdivision of Lot 62 DP 584829
Surveyor: Christopher Gordon Knapp
Firm: Reyburn & Bryant 1999 Ltd
Title Plan
LT 596768
Approved on: 25/07/2024

Proposed Dwelling

Kelly Hampson & Jason Farac
1 Te Uru Lane,
Kerikeri
Lot 5 DP 596768

Construction Plans
Date: 26 June 2025

G.J. Gardner. HOMES
"We're Great Together"

FAR NORTH
Ph: (09) 407 3441
Fax: (09) 407 3442

Designer Sheet Index		
Sheet No.	Sheet Title	Rev
A01a	Site Location Plan	BC-I-2
A01b	Site Plan	BC-I-2
A02	Floor Plan	BC-I-2
A03	Elevations	BC-I-2
A04	Electrical Plan	BC-I-2
A05	Drainage Plan	BC-I-2
A06	Foundation Plan	BC-I-2
A07	Roof Plan	BC-I-2
A08	Framing & Lintel Plan	BC-I-2
A09	Bracing Plan	BC-I-2
A10	Section A	BC-I-2
A11	Threshold Details	BC-I-2
A12	Hold Down Details	BC-I-2
A13	Cladding Details	BC-I-2
A14	Roof Details	BC-I-2
A15	Membrane Details	BC-I-2
A16	Membrane Details	BC-I-2
A17	Drainage Details	BC-I-2
A18	Seismic Restraint Details	BC-I-2
Revisions		
-	-	-

Engineer Sheet Index		
Sheet No.	Sheet Title	Rev
S0.1	Cover Page	
S0.2	Typical Steel Detailing	
S0.3	Typical Pipe Penetration Details	
S1.1	Raft Floor Plan	
S2.1	Raft Floor Details	

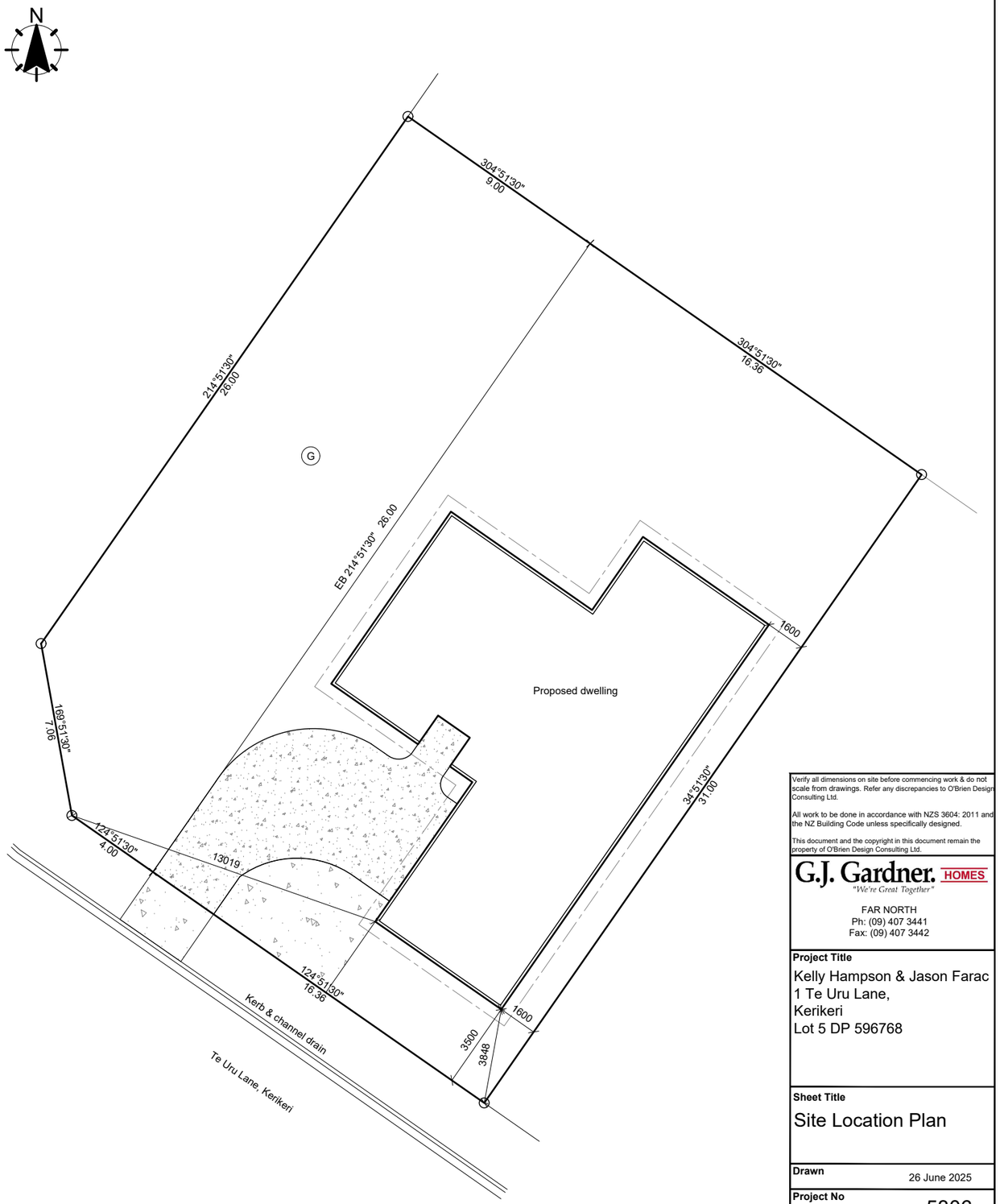

Verify all dimensions on site before commencing work & do not scale from drawings. Refer any discrepancies to O'Brien Design Consulting Ltd.

All work to be done in accordance with NZS 3604: 2011 and the NZ Building Code unless specifically designed.

This document and the copyright in this document remain the property of O'Brien Design Consulting Ltd.

G.J. Gardner. HOMES
"We're Great Together"
FAR NORTH
Ph: (09) 407 3441
Fax: (09) 407 3442

Project Title
Kelly Hampson & Jason Farac
1 Te Uru Lane,
Kerikeri
Lot 5 DP 596768

Sheet Title
Site Location Plan

Drawn 26 June 2025

Project No 5306

Rev BC-I-2

Sheet A01a

Scale (A3 Original) 1: 200

2 1 0 2 4 m

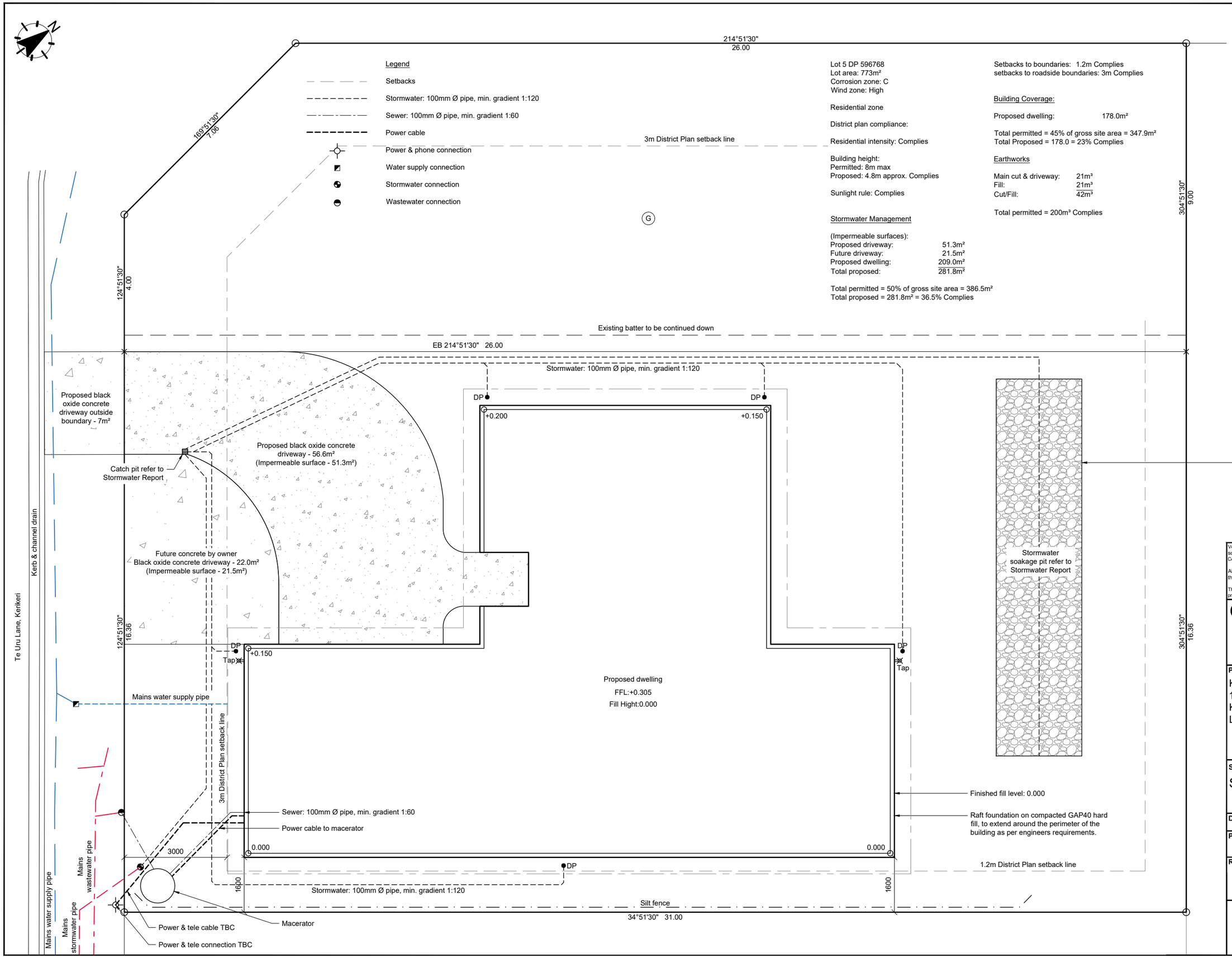

Lot 5 DP 596768
Lot area: 773m²
Corrosion zone: C
Wind zone: High

Residential zone

District plan compliance:

Residential intensity: Complies

Building height:
Permitted: 8m max
Proposed: 4.8m approx. Complies

Sunlight rule: Complies

Stormwater Management

(Impermeable surfaces):

Proposed driveway:	51.3m²
Future driveway:	21.5m²
Proposed dwelling:	209.0m²
Total proposed:	281.8m²

Total permitted = 50% of gross site area = 386.5m²
Total proposed = 281.8m² = 36.5% Complies

Setbacks to boundaries: 1.2m Complies
setbacks to roadside boundaries: 3m Complies

Building Coverage:

Proposed dwelling: 178.0m²

Total permitted = 45% of gross site area = 347.9m²
Total Proposed = 178.0 = 23% Complies

Earthworks

Main cut & driveway:	21m³
Fill:	21m³
Cut/Fill:	42m³

Total permitted = 200m³ Complies

NOTES

- All drainage to comply with AS/NZS3500 & NZBC G13/AS1. All drainage is diagrammatical, drainlayer to determine on site drainage layout and provide asbuilt plan when complete.
- The works which are being proposed will comply with Earthworks EW-S3 Accidental Discovery Protocol and Earthworks EW-S5 Erosion and Sediment Control - Auckland Council Guideline Document GD005 GD05 Erosion and Sediment Control.pdf (aucklanddesignmanual.co.nz)

Verify all dimensions on site before commencing work & do not scale from drawings. Refer any discrepancies to O'Brien Design Consulting Ltd.

All work to be done in accordance with NZS 3604: 2011 and the NZ Building Code unless specifically designed.

This document and the copyright in this document remain the property of O'Brien Design Consulting Ltd.

G.J. Gardner. HOMES
"We're Great Together"
FAR NORTH
Ph: (09) 407 3441
Fax: (09) 407 3442

Project Title
Kelly Hampson & Jason Farac
1 Te Uru Lane,
Kerikeri
Lot 5 DP 596768

Sheet Title
Site Plan

Drawn 26 June 2025

Project No 5306

Rev BC-I-2

Sheet A01b

Scale (A3 Original) 1: 100

1 0.5 0 1 2 m

SPECIFICATION:

- Stud height - 2440 *(2400 Nominal)*
- Soffit height - 2170
- Lintel height - 2155
- Roof pitch - 25°
- 70 series brick veneer
- Gerard metal tile roofing

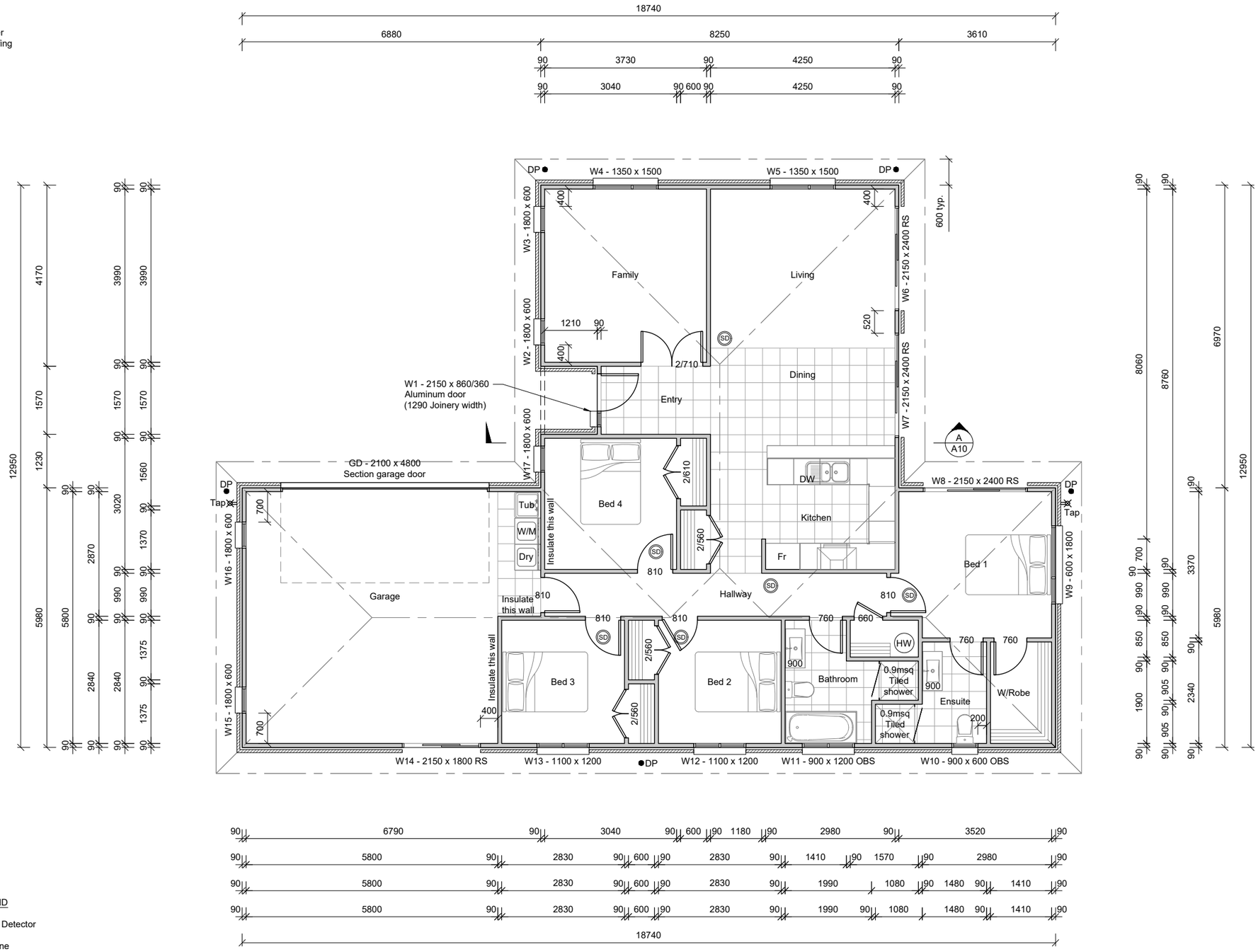

NOTE:

1. All dimensions taken from the outside of pre-cut, please check all dimensions before construction commences.
2. Refer to Framing & Lintel Plan for lintel dimensions, stud spacing & external door offsets.
2. Refer to Eave detail for stud, lintel and soffit framing heights.
3. Additional nogs to be installed at framing stage to allow for towel rails, wardrobe & fixed shelves, WC cistern, toilet roll holders, wall mounted extractors, heat pump, A/C units & garage door components where required.
4. Refer to attached sheet for cladding & roofing notes & details.
5. All wet areas to be provided with impervious linings as per NZBC E3/AS1.
6. Smoke alarms to be installed to NZS 4514:2021
7. Where studs exceed 450mm c/c install polypropylene tape horizontally at 300mm c/c over building wrap.
8. All wall framing typically H1.2 treated unless specifically stated.
9. All external linings to be installed to manufacturers instructions, refer to separate detail sheet for cladding details & notes.

BUILDING AREA:

Floor Area (Framing): 167.5m²
Floor Area (Brickline): 175.0m²

Roof Area: 209.0m²

FIXINGS:

Exposure Zone: C
Durability of fixings to comply with NZS 3604:2011 Section 4 & NZBC B2/AS1

LEGEND

- SD — Smoke Detector
- Roof Line
- 90 x 45 SG8 H1.2 Timber framing walls
- Brick Veneer
- Selected tiles on selected tile underlay to all wet areas installed to manufacturers specifications & Branz tiling good practice guide
- HW — 180L Mains pressure hot water cylinder

Verify all dimensions on site before commencing work & do not scale from drawings. Refer any discrepancies to O'Brien Design Consulting Ltd.

All work to be done in accordance with NZS 3604: 2011 and the NZ Building Code unless specifically designed.

This document and the copyright in this document remain the property of O'Brien Design Consulting Ltd.

G.J. Gardner. HOMES
"We're Great Together"

FAR NORTH
Ph: (09) 407 3441
Fax: (09) 407 3442

Project Title
Kelly Hampson & Jason Farac
1 Te Uru Lane,
Kerikeri
Lot 5 DP 596768

Sheet Title
Floor Plan

Drawn 26 June 2025

Project No 5306

Rev BC-I-2

Sheet A02

Scale (A3 Original) 1: 100

1 0.5 0 1 2 m

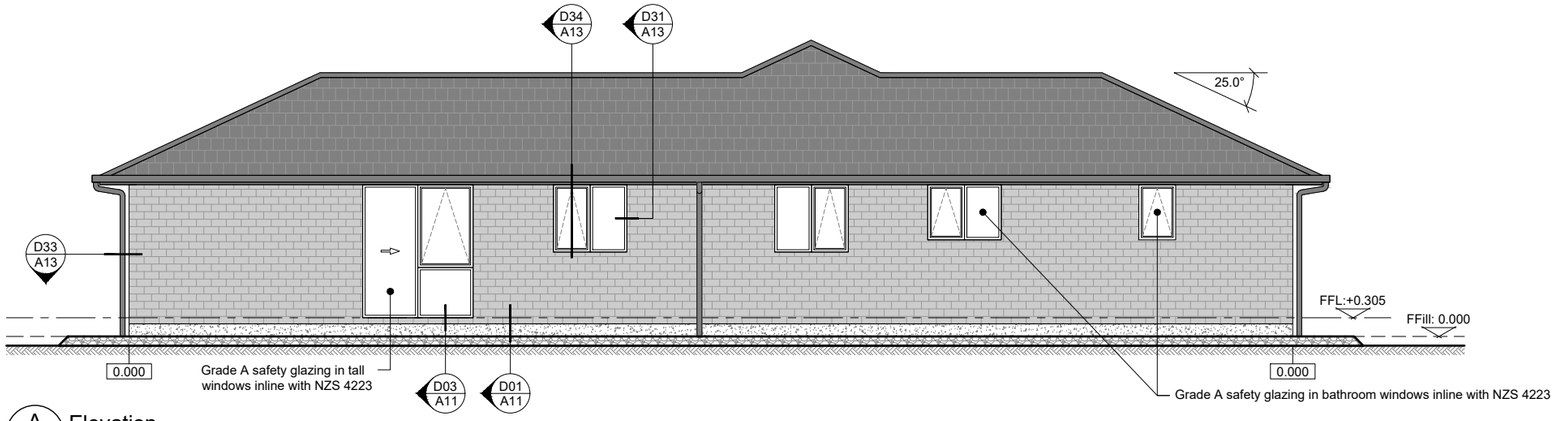

A Elevation
A02 SCALE = 1:100 @ A3

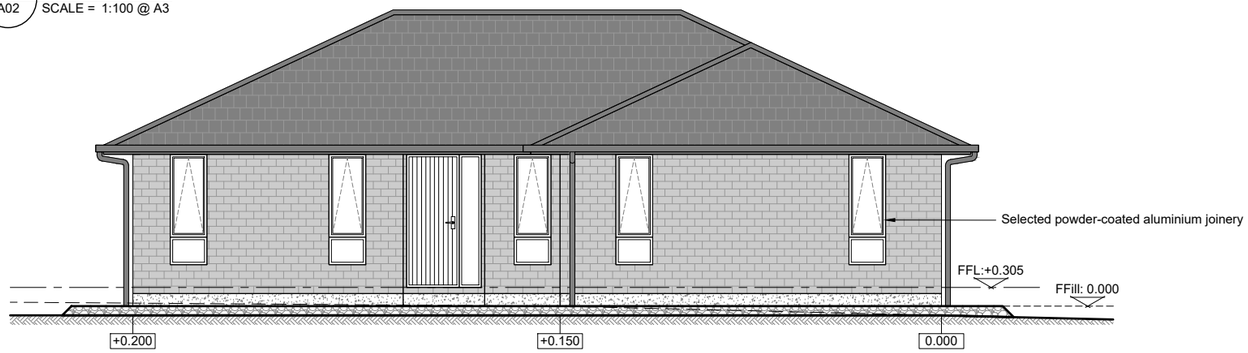

B Elevation
A02 SCALE = 1:100 @ A3

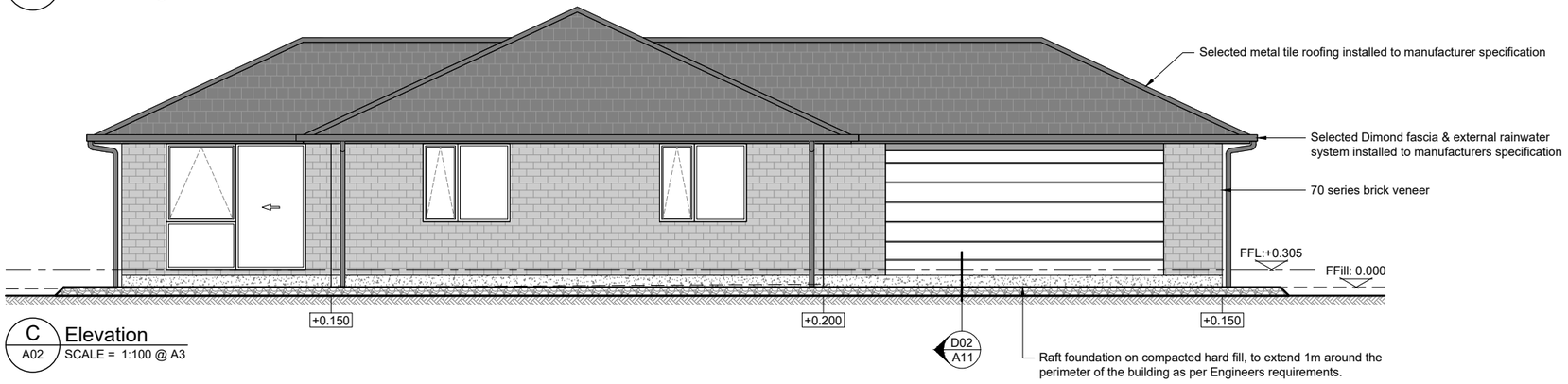

C Elevation
A02 SCALE = 1:100 @ A3

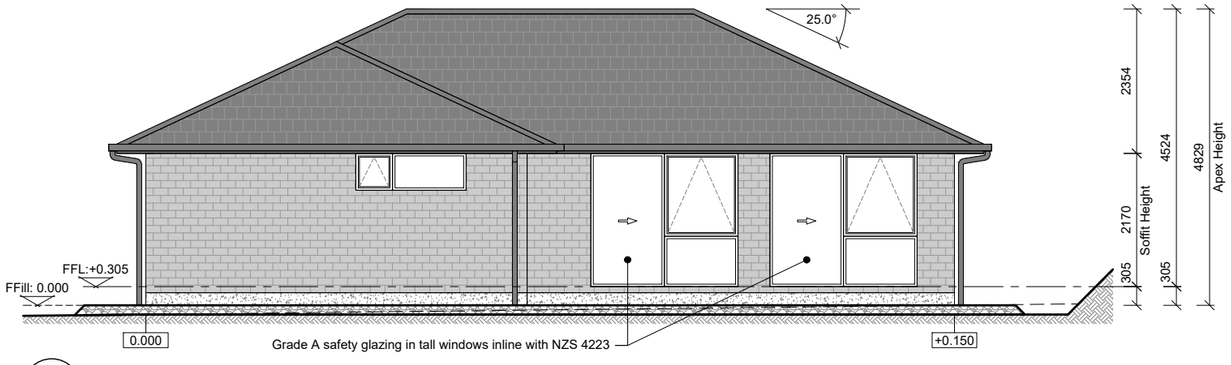

D Elevation
A02 SCALE = 1:100 @ A3

SPECIFICATIONS	
Cladding Type	70 Series Brick
Stud Height	2.4m
Roofing Type	Steel Tile
Roof Pitch	25°
Joinery	Aluminium
Wind Zone	High
Earth Quake Zone	1

RISK MATRIX					
Risk Factor	L	M	H	VH/EH	Score
A. Wind Zone	0	0	1	2	1
B. Number of Storeys	0	1	2	4	0
C. Roof / Wall Intersection	0	1	3	5	0
D. Eave Width	0	1	2	5	1
E. Envelope Complexity	0	1	3	6	0
F. Deck Design	0	2	4	6	0
	Total				2

NOTE:

1. All heights shown are existing ground heights.
2. All external linings to be installed to manufacturers instructions, refer to separate detail sheet for cladding details & notes.
3. All windows and doors double glazing low E Xcel with thermal break.
4. Grade A safety glazing in bathrooms & tall windows and sliders inline with NZS 4223.

FIXINGS:

Exposure Zone: C
Durability of fixings to comply with NZS 3604:2011 Section 4 & NZBC B2/AS1

Verify all dimensions on site before commencing work & do not scale from drawings. Refer any discrepancies to O'Brien Design Consulting Ltd.

All work to be done in accordance with NZS 3604: 2011 and the NZ Building Code unless specifically designed.

This document and the copyright in this document remain the property of O'Brien Design Consulting Ltd.

G.J. Gardner. HOMES
"We're Great Together"
FAR NORTH
Ph: (09) 407 3441
Fax: (09) 407 3442

Project Title
Kelly Hampson & Jason Farac
1 Te Uru Lane,
Kerikeri
Lot 5 DP 596768

Sheet Title
Elevations

Drawn 26 June 2025

Project No 5306

Rev BC-I-2

Sheet A03

Scale (A3 Original) 1: 100

1 0.5 0 1 2 m

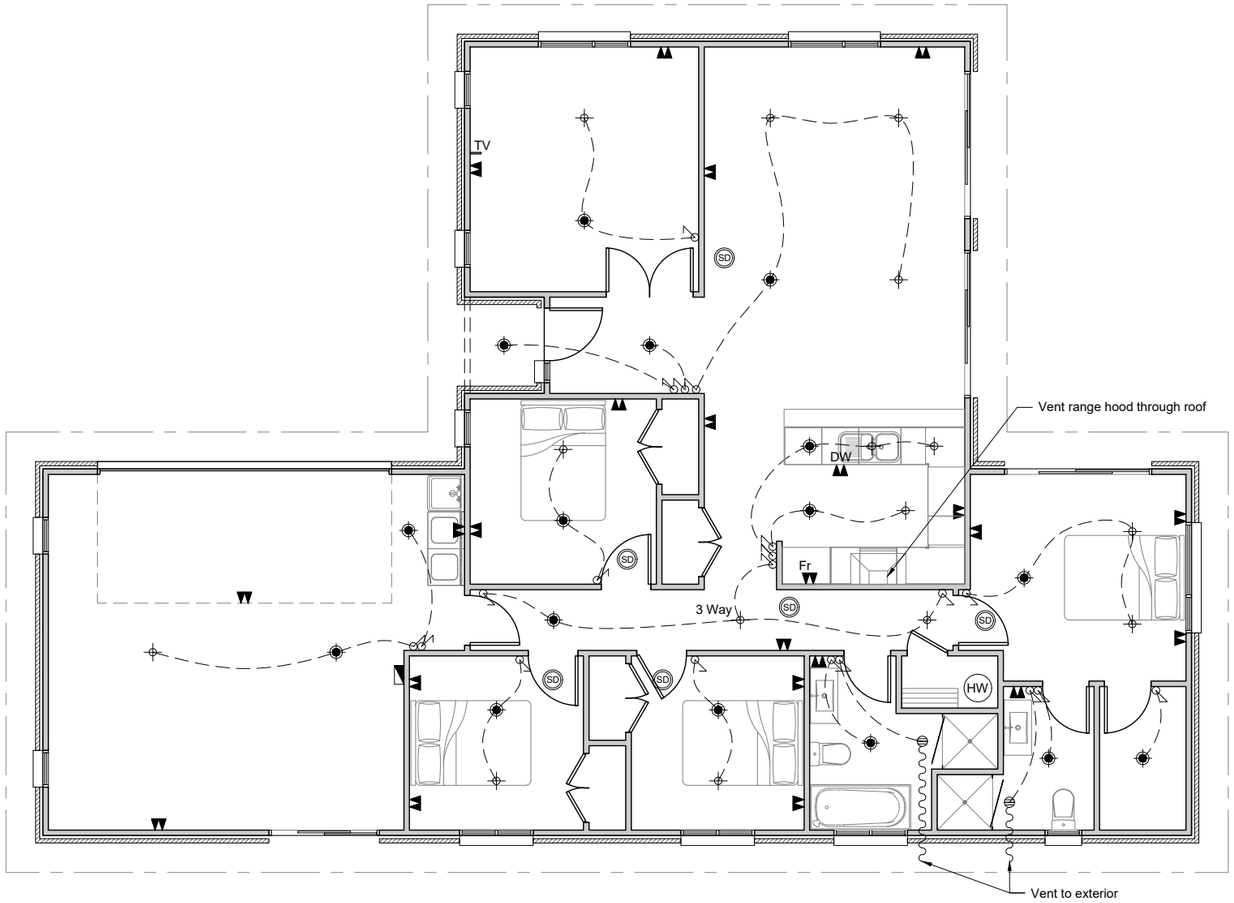

NOTE:

1. All electrical work to by a registered Electrician to comply with Electricity regulations, NZ Standards & NZBC.
2. Electrician to supply electrical "Certificate of Compliance" on completion.
3. Electrical layout schematic only. All electrical & lighting fixtures & fittings are shown indicative - not to scale. To be confirmed on site with owner prior to installation.
4. All power points to be 350mm above FFL and 200mm above bench top and fixed horizontally unless specified.
5. All switches to be 1200mm above FFL and fixed vertically (up/down).
6. Power point for rangehood to be in ceiling space
7. Electrician to check bracing plan and offset flush boxes 90mm if penetration occurs.
8. External power points and electrical Fittings to be IP rated to provide dust and weather protection to comply with NZ Standards.
9. All recessed light fixtures to be CA rated to comply with AS/NZS 605982.2 (Insulation to comply with AS/NZS 60695.11.5)
10. Smoke alarms to be installed to NZS 4514:2021.
11. Equipment required must be either 10 year long-life battery-operated (non-removable/sealed) or 240v mains powered, interconnected smoke alarms.
12. Smoke alarms shall be located on or near the ceiling.
13. Smoke alarms shall be located in all bedrooms, living spaces, hallways and landings within the building.
14. Where more than one smoke alarm is needed to meet the requirements of this standard, these alarms shall be interconnected so that when one activates, all smoke alarm devices in the household unit will sound. The interconnection between alarms may be wired or wireless.
15. Where a kitchen or scullery is separated from the living spaces and hallways by doors that can be closed, an alarm specified by its manufacturer as suitable for a kitchen shall be located in the kitchen. This may be a heat alarm to avoid nuisance activations.

LEGEND

	1	3 way
SD	6	Smoke detector
	16	Primary LED down Light
	15	Secondary LED down light
	2	Mechanical vent, vented to exterior
	24	Double power points
TV	1	TV outlet
	1	Meter board

Verify all dimensions on site before commencing work & do not scale from drawings. Refer any discrepancies to O'Brien Design Consulting Ltd.

All work to be done in accordance with NZS 3604: 2011 and the NZ Building Code unless specifically designed.

This document and the copyright in this document remain the property of O'Brien Design Consulting Ltd.

G.J. Gardner. HOMES
"We're Great Together"
FAR NORTH
Ph: (09) 407 3441
Fax: (09) 407 3442

Project Title
Kelly Hampson & Jason Farac
1 Te Uru Lane,
Kerikeri
Lot 5 DP 596768

Sheet Title
Electrical Plan

Drawn 26 June 2025

Project No 5306

Rev BC-I-2

Sheet A04

Scale (A3 Original) 1: 100

1 0.5 0 1 2 m

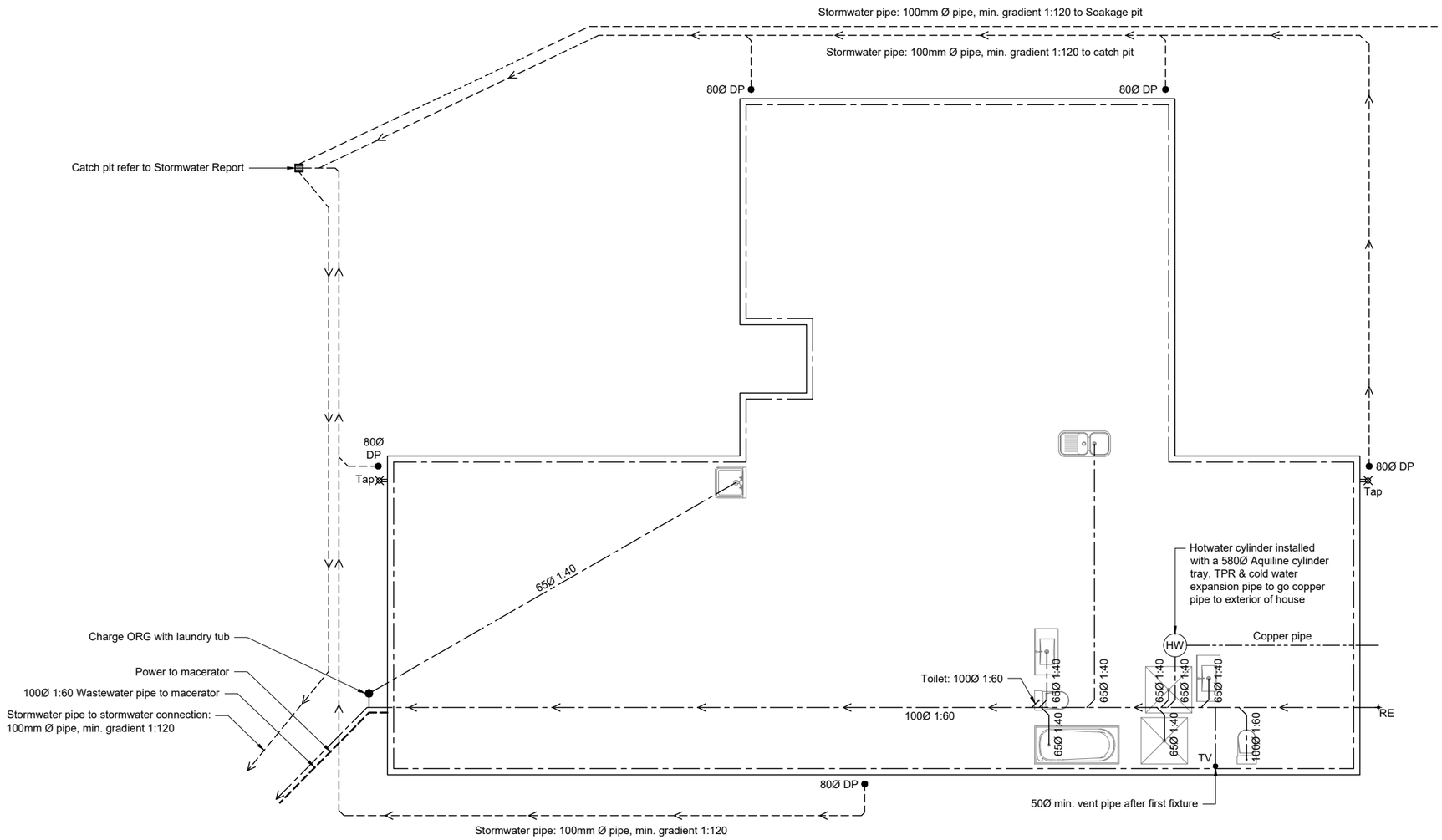

Waste Pipe Gradients (min)		
40Ø	1:40 Minimum Gradient	4DU
65Ø	1:40 Minimum Gradient	21DU
100Ø	1:60 Minimum Gradient	115DU
Waste Pipe & Discharge Units		
40Ø	Hand basin	1DU
40Ø	Kitchen Sink	3DU
40Ø	Dishwasher	3DU
40Ø	Laundry Tub	3DU
40Ø	Washing Machine	5DU
40Ø	Shower	2DU
40Ø	Bath	4DU
100Ø	WC Pan	4DU
Drainage Pipe Gradient		
65Ø	1:40 Minimum Gradient	25DU
85Ø	1:60 Minimum Gradient	61DU
100Ø	1:60 Minimum Gradient	205DU
150Ø	1:60 Minimum Gradient	1310DU

● TV	Terminal Vent
● ORG	Overflow Relief Gully
✦ RE	Rodding Eye
— – —— – —	Drainage - Waste Pipe
— — — — —	100mm Ø Stormwater Pipe
—— - —— - ——	HWC Copper pipe

NOTE:

1. All work to be done in accordance with NZS 3604: 2011 and the NZ Building Code unless specifically designed.
2. All drainage is diagrammatical, drainlayer to determine on site drainage layout and provide asbuilt plan when complete.
3. Number of downpipes required as per NZBC E1/AS1 1 x 74mmØ downpipe per 70m² roof plan area.
4. Stormwater: 100mm Ø UPVC pipe, minimum gradient 1:120.
5. All drainage to comply with AS/NZS 3500 & NZBC G13/AS1.
6. All lateral drains under slab to be a minimum of 65Ø.
7. Provide seismic restraints & temperature valve to hot water cylinder as per NZBC G12/AS1. Refer to separate sheet for details.

Relief vent pipe shall be:

1. Discharged to a location easily visible and identifiable and unlikely to cause nuisance or damage to the building of injury to persons.
2. Each line shall fall continuously from valve to point of discharge.
3. Drain to terminate:
   - 3.1. Not lower than 200mm of higher than 300mm above an unpaved surface, or
   - 3.2. Not lower than 75mm or higher than 300mm above a gravel pit not less than 100mm in diameter in a paved surface.
4. Have air gaps as required.
5. Pipework downstream of the relief valve should be capable of carrying water exceeding 93°C.
6. Be located to discharge away from building where necessary so as to adversely effect slab, foundation of footing.

Verify all dimensions on site before commencing work & do not scale from drawings. Refer any discrepancies to O'Brien Design Consulting Ltd.

All work to be done in accordance with NZS 3604: 2011 and the NZ Building Code unless specifically designed.

This document and the copyright in this document remain the property of O'Brien Design Consulting Ltd.

G.J. Gardner. HOMES
"We're Great Together"
FAR NORTH
Ph: (09) 407 3441
Fax: (09) 407 3442

Project Title
Kelly Hampson & Jason Farac
1 Te Uru Lane,
Kerikeri
Lot 5 DP 596768

Sheet Title
Drainage Plan

Drawn 26 June 2025

Project No 5306

Rev BC-I-2

Sheet A05

Scale (A3 Original) 1: 100

1 0.5 0 1 2 m

ENGINEERED RAFT FOUNDATION

Plan to be read in conjunction with Engineers Raft Foundation Calculations.

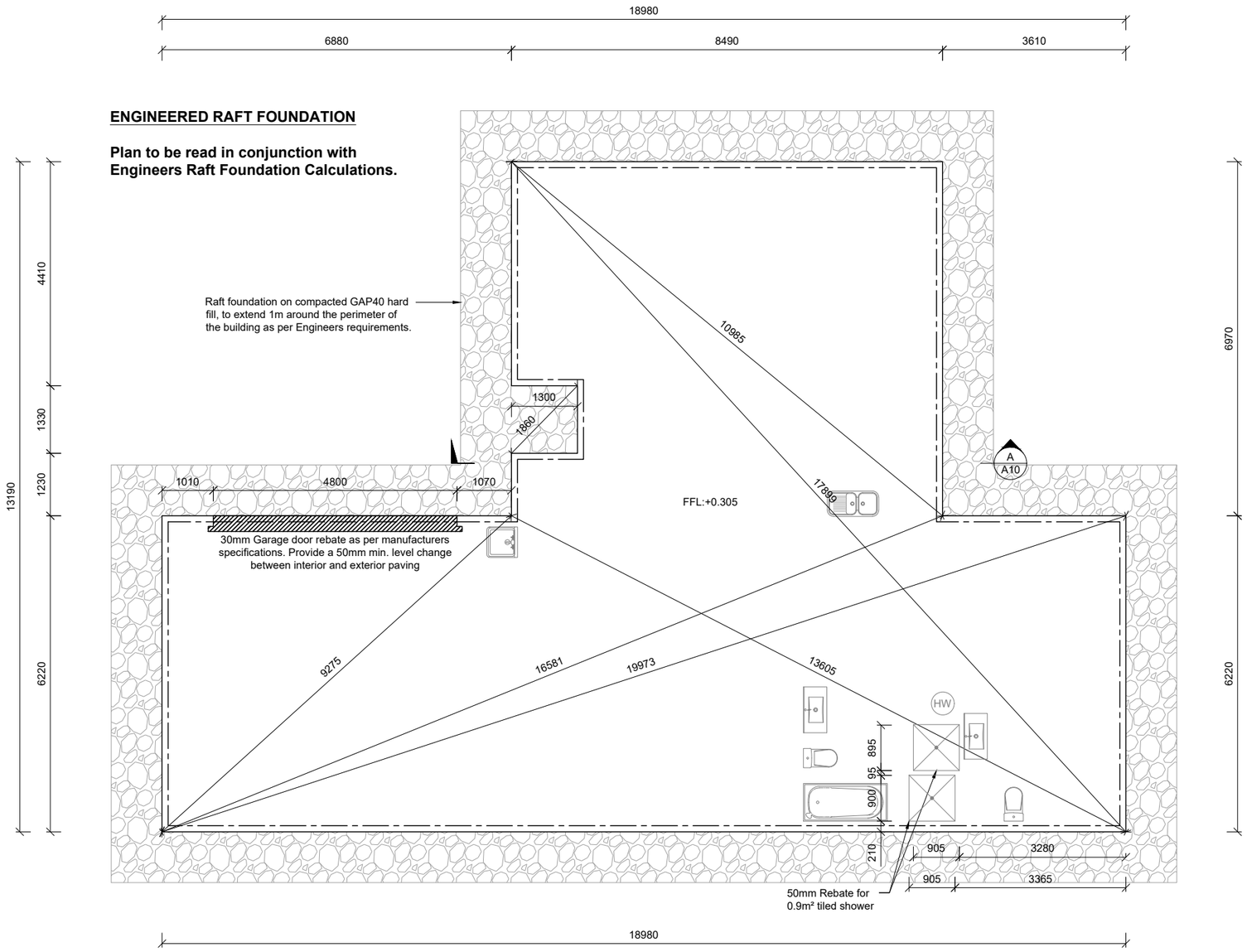

NOTE:

1. All work to be done in accordance with NZS 3604: 2011 and the NZ Building Code unless specifically designed.
2. Check all existing drain locations and all dimensions on site before construction.
3. Refer to Engineers notes for concrete MPa & other details.
4. Plans to be read in conjunction with Engineers foundation design & PS1.
5. Local Authority should inspect the earthworks, building platform construction and foundation, prior to the concrete being poured to ensure that the design criteria has been met.
6. All external linings to be installed to manufacturers instructions, refer to separate detail sheet for cladding details & notes.
7. Confirm rebate to slab for external doors with Designer or home builder before construction.
8. Granular fill to comply with NZS 3604:2011, greater than 600mm to be engineered. Fill to be compacted at 150mm intervals and tested at 300mm intervals. Do not build on uncertified fill.

FIXINGS

Exposure zone: C
Durability of fixings to comply with NZS 3604:2011 Section 4 & NZBC B2/AS1

Exposed fixings to be type 304 stainless steel.
Sheltered fixings to be hot-dipped galvanize.
Closed in nail plates in roof space to be continuous coated galvanized steel.
Closed wire dogs and bolts to be hot dipped galvanized steel.
All other closed structural fixings to be mild steel (uncoated non galvanized)

LEGEND

Edge of slab
Brick rebate

Verify all dimensions on site before commencing work & do not scale from drawings. Refer any discrepancies to O'Brien Design Consulting Ltd.

All work to be done in accordance with NZS 3604: 2011 and the NZ Building Code unless specifically designed.

This document and the copyright in this document remain the property of O'Brien Design Consulting Ltd.

G.J. Gardner. HOMES
"We're Great Together"
FAR NORTH
Ph: (09) 407 3441
Fax: (09) 407 3442

Project Title
Kelly Hampson & Jason Farac
1 Te Uru Lane,
Kerikeri
Lot 5 DP 596768

Sheet Title
Foundation Plan

Drawn 26 June 2025

Project No 5306

Rev BC-I-2

Sheet A06

Scale (A3 Original) 1: 100

1 0.5 0 1 2 m

NOTE:

Unless specifically noted all internal loadbearing walls less than 10KN, so no thickening required

NOTE:

1. All work to be done in accordance with NZS 3604: 2011 and the NZ Building Code unless specifically designed.
2. Kitchen extractor hood to be vented to exterior.
3. Roofing to be installed to New Zealand Metal Roofing Code of Practice and in accordance with manufacturers installation instructions.
4. Refer to Eave detail for stud, lintel and soffit framing heights.
5. Precut manufacturer to provide truss and lintel fixings and Producer Statement.
6. All drainage is diagrammatical, drainlayer to determine on site drainage layout and provide asbuilt plan when complete.
7. Number of downpipes required as per NZBC E1/AS1 1 x 74mmØ downpipe per 70m² roof plan area.
8. Stormwater: 100mm Ø UPVC pipe, minimum gradient 1:120.
9. Selected Dimond Fascia & Continuous Spouting with 80Ø PVC downpipe installed to manufactures specifications

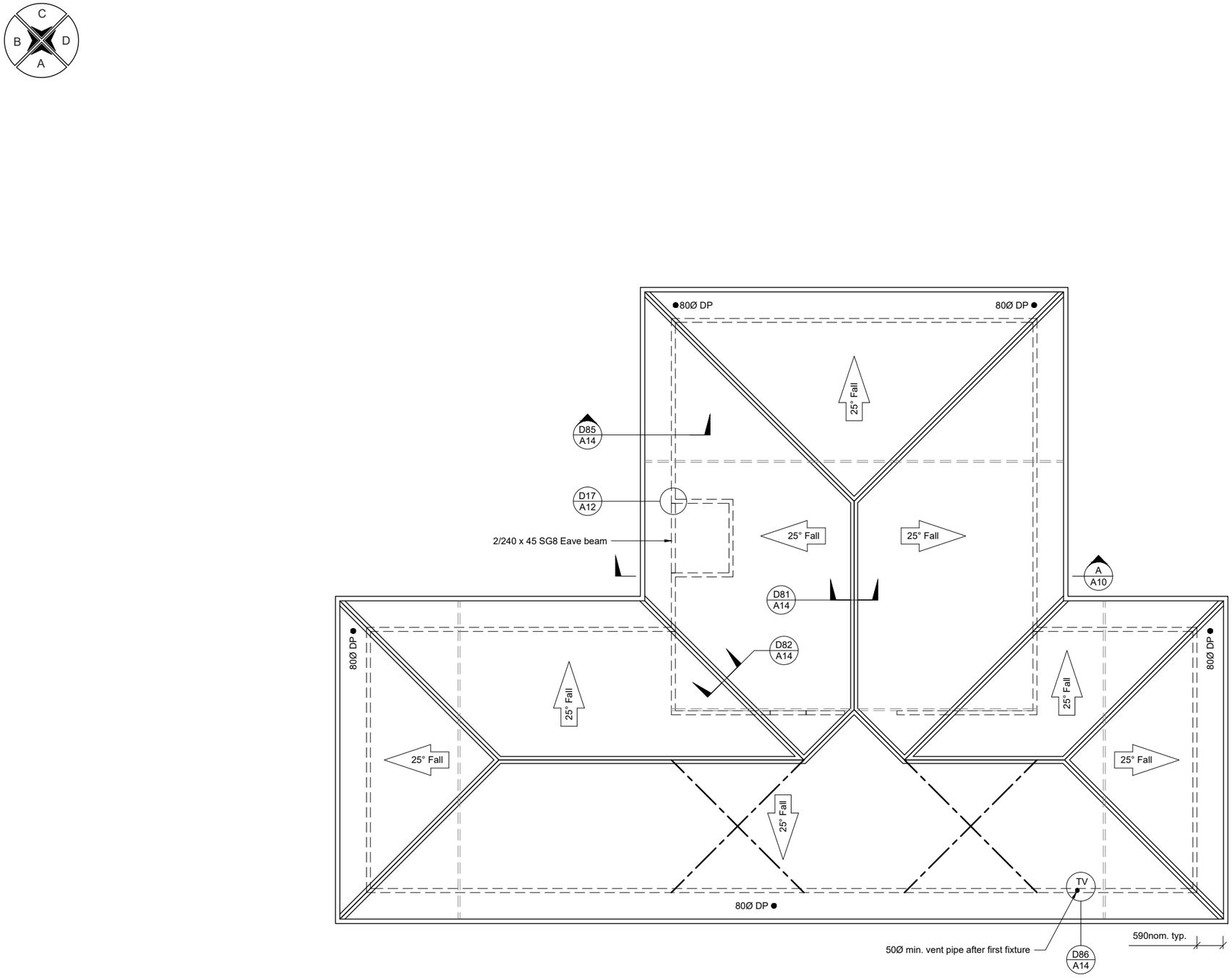

FIXINGS

Exposure zone: C
Durability of fixings to comply with NZS 3604:2011 Section 4 & NZBC B2/AS1

Exposed fixings to be type 304 stainless steel.

Sheltered fixings to be hot-dipped galvanize.

Closed in nail plates in roof space to be continuous coated galvanized steel.

Closed wire dogs and bolts to be hot dipped galvanized steel.

All other closed structural fixings to be mild steel (uncoated non galvanized)

LEGEND

———	Roof Line
– – – – – –	Load bearing stud
= = = = = =	Girder truss
TV●	Terminal vent
——— – – ———	Lumberlok strip brace both ways in roof plane fixed using 5No. 30 x 3.15mm nails each end and 1No. 30 x 3.15mm nails where brace crosses truss

Verify all dimensions on site before commencing work & do not scale from drawings. Refer any discrepancies to O'Brien Design Consulting Ltd.

All work to be done in accordance with NZS 3604: 2011 and the NZ Building Code unless specifically designed.

This document and the copyright in this document remain the property of O'Brien Design Consulting Ltd.

G.J. Gardner. HOMES
"We're Great Together"

FAR NORTH
Ph: (09) 407 3441
Fax: (09) 407 3442

Project Title
Kelly Hampson & Jason Farac
1 Te Uru Lane,
Kerikeri
Lot 5 DP 596768

Sheet Title
Roof Plan

Drawn 26 June 2025

Project No 5306

Rev BC-I-2

Sheet A07

Scale (A3 Original) 1: 100

1 0.5 0 1 2 m

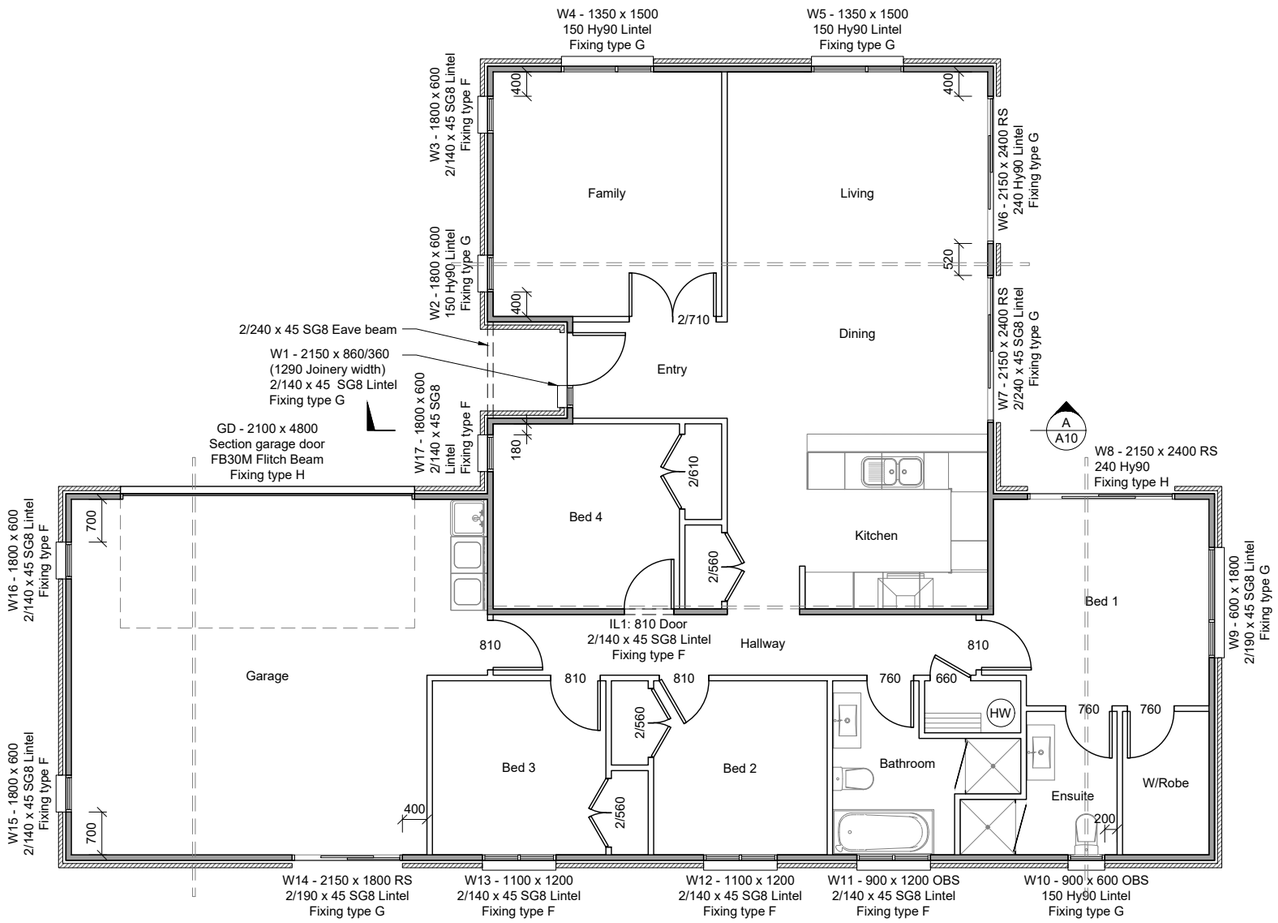

NOTE:

1. All work to be done in accordance with NZS 3604: 2011 and the NZ Building Code unless specifically designed.
2. Refer to NZS3604:2011 Section 4 for durability requirements.
2. Do not scale from drawings.
3. Check all dimensions before construction commences.
4. Refer to Eave detail for stud, lintel and soffit framing heights.
5. Precut manufacturer to provide truss and lintel fixings and Producer Statement.
6. Flashing materials must be selected based on environmental exposure, refer to NZS 3604 and Table 20 of NZBC clause E2/AS1.
7. Building underlay must comply with acceptable solution NZBC clause E2/AS1 and NZS 3604.
8. Sill support bars conforming to BRANZ evaluation method EM6 to be installed to all windows.
9. Flashing tape must have proven compatibility with the selected building underlay and other materials with which it comes into contact as per Table 21 of NZBC clause E2/AS1.
10. As per NZBC 9.1.10.8: Install windows & doors using pairs of min 75x3.15 jolt head nails through reveals into surrounding frame at
    a) 450mm max c/c along sills, jambs & heads
    b) 150mm max from ends of reveal Install packer between reveals & framing at all fixing points, except between head reveals & lintels.
11. All window joinery to comply with NZS 4211:2008
12. All glazing to comply with NZS 4223
13. All window and door openings to be checked on site prior to manufacture, any discrepancies to be reported to GJ Gardner Homes Ltd.
14. All internal doors to be offset from return walls by 90mm minimum.
15. Where studs exceed 450mm c/c install polypropylene tape horizontally at 300mm c/c over building wrap.
16. Optional: 'HIANDRI' Bottom plate packers to be installed as per manufacturers specifications

FIXINGS

Exposure zone: C
Durability of fixings to comply with NZS 3604:2011 Section 4 & NZBC B2/AS1

Exposed fixings to be type 304 stainless steel.

Sheltered fixings to be hot-dipped galvanize.

Closed in nail plates in roof space to be continuous coated galvanized steel.

Closed wire dogs and bolts to be hot dipped galvanized steel.

All other closed structural fixings to be mild steel (uncoated non galvanized)

LEGEND

90 x 45 SG8 H1.2 Timber framing to external load bearing walls at 600 c/c
90 x 45 SG8 H1.2 Timber framing to internal load bearing walls at 600 c/c

90 x 45 SG8 H1.2 Timber Framing non-load bearing walls at 600 c/c

Girder truss

Verify all dimensions on site before commencing work & do not scale from drawings. Refer any discrepancies to O'Brien Design Consulting Ltd.

All work to be done in accordance with NZS 3604: 2011 and the NZ Building Code unless specifically designed.

This document and the copyright in this document remain the property of O'Brien Design Consulting Ltd.

G.J. Gardner. HOMES
"We're Great Together"

FAR NORTH
Ph: (09) 407 3441
Fax: (09) 407 3442

Project Title
Kelly Hampson & Jason Farac
1 Te Uru Lane,
Kerikeri
Lot 5 DP 596768

Sheet Title
Framing & Lintel Plan

Drawn 26 June 2025

Project No 5306

Rev BC-I-2

Sheet A08

Scale (A3 Original) 1: 100

1 0.5 0 1 2 m

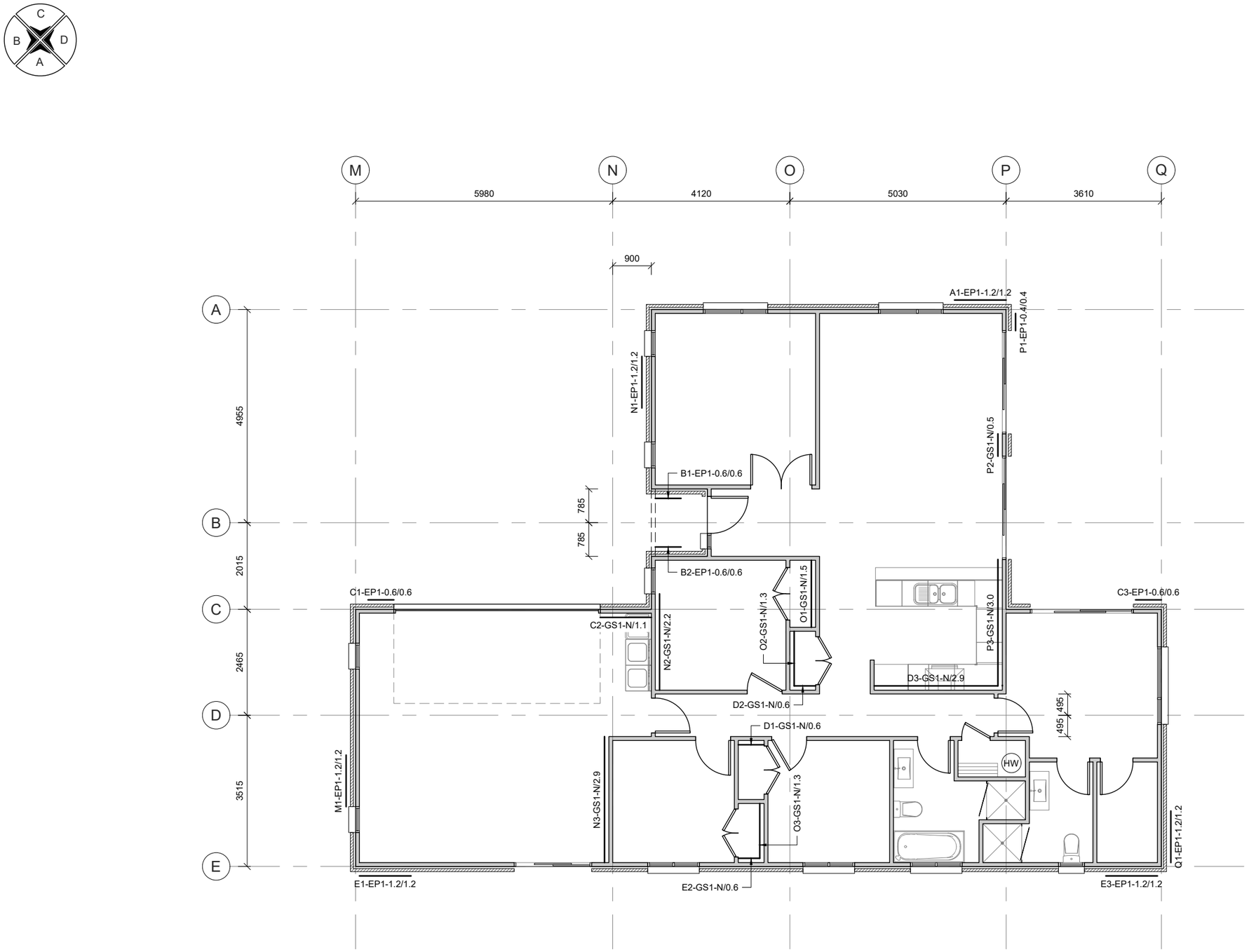

NOTE:

1. All work to be done in accordance with NZS 3604: 2011 and the NZ Building Code unless specifically designed.
2. All bracing elements to be installed to manufacturers specifications.
3. Aqualine GIB to all bathroom walls.

WALL BRACING

GS1-N:	10mm GIB one face Min. 0.4m long, no hold downs.
EP1-0.4:	7mm min Plywood one face min. 0.4m long
EP1-0.6:	7mm min Plywood one face min. 0.6m long
EP1-1.2:	7mm min Plywood one face min. 1.2m long

Verify all dimensions on site before commencing work & do not scale from drawings. Refer any discrepancies to O'Brien Design Consulting Ltd.

All work to be done in accordance with NZS 3604: 2011 and the NZ Building Code unless specifically designed.

This document and the copyright in this document remain the property of O'Brien Design Consulting Ltd.

G.J. Gardner. HOMES
"We're Great Together"

FAR NORTH
Ph: (09) 407 3441
Fax: (09) 407 3442

Project Title
Kelly Hampson & Jason Farac
1 Te Uru Lane,
Kerikeri
Lot 5 DP 596768

Sheet Title
Bracing Plan

Drawn 26 June 2025

Project No 5306

Rev BC-I-2

Sheet A09

Scale (A3 Original) 1: 100

1 0.5 0 1 2 m

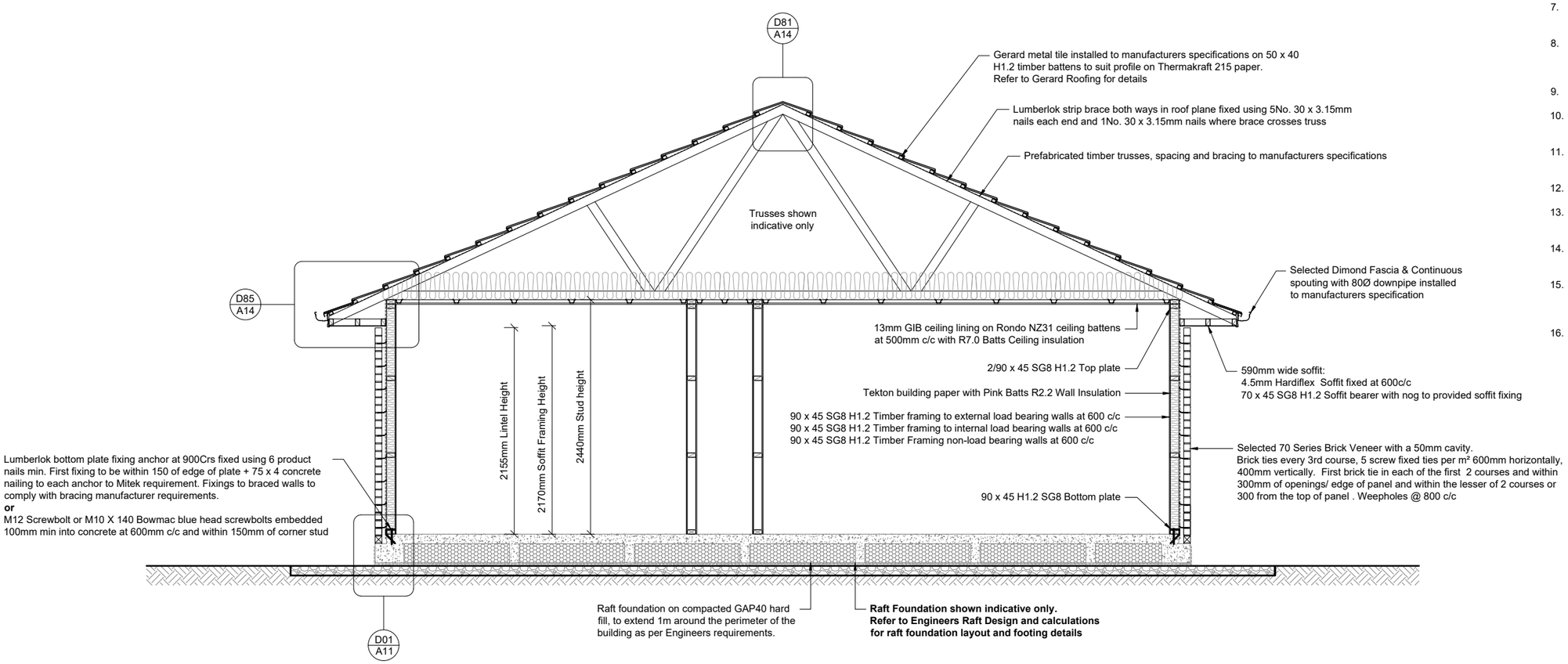

SECTION NOTES:

1. Do not scale from drawings.
2. Refer to Engineers notes for concrete MPa & other details.
3. Plans to be read in conjunction with Engineers foundation design & PS1.
4. Local Authority should inspect the earthworks, building platform construction and foundation, prior to the concrete being poured to ensure that the design criteria has been met.
5. Fill to be compacted at 150mm intervals. Do not build on uncertified fill. All wet areas to be provided with impervious linings as per NZBC E3/AS1.
6. All wall framing typically H1.2 treated unless specifically stated.
7. Refer to Eave detail for stud, lintel and soffit framing heights.
8. Additional nogs to be installed at framing stage to allow for towel rails, wardrobe & fixed shelves, WC cistern, toilet roll holders & wall mounted extractors.
9. Refer to Framing & Lintel Plan for lintel dimensions.
10. Refer to Masonry Veneer Details sheet for brick veneer notes.
11. All wet areas to be provided with impervious linings as per NZBC E3/AS1.
12. Aqualine GIB to all bathroom walls.
13. Precut manufacturer to provide truss and producer statement.
14. Where studs exceed 450mm c/c install polypropylene tape horizontally at 300mm c/c over building wrap.
15. Domestic smoke detectors to be installed in accordance with C AS1 & F7 ensure placement within 3m of bedroom doors.
16. Optional: 'HIANDRI' Bottom plate packers to be installed as per manufacturers specifications

FIXINGS

Exposure zone: C
Durability of fixings to comply with NZS 3604:2011 Section 4 & NZBC B2/AS1

Exposed fixings to be type 304 stainless steel.

Sheltered fixings to be hot-dipped galvanize.

Closed in nail plates in roof space to be continuous coated galvanized steel.

Closed wire dogs and bolts to be hot dipped galvanized steel.

All other closed structural fixings to be mild steel (uncoated non galvanized)

Verify all dimensions on site before commencing work & do not scale from drawings. Refer any discrepancies to O'Brien Design Consulting Ltd.

All work to be done in accordance with NZS 3604: 2011 and the NZ Building Code unless specifically designed.

This document and the copyright in this document remain the property of O'Brien Design Consulting Ltd.

G.J. Gardner. HOMES
"We're Great Together"

FAR NORTH
Ph: (09) 407 3441
Fax: (09) 407 3442

Project Title
Kelly Hampson & Jason Farac
1 Te Uru Lane,
Kerikeri
Lot 5 DP 596768

Sheet Title
Section A

Drawn 26 June 2025

Project No 5306

Rev BC-I-2

Sheet A10

Scale (A3 Original) 1: 50

0.5 0.25 0 0.5 1 m

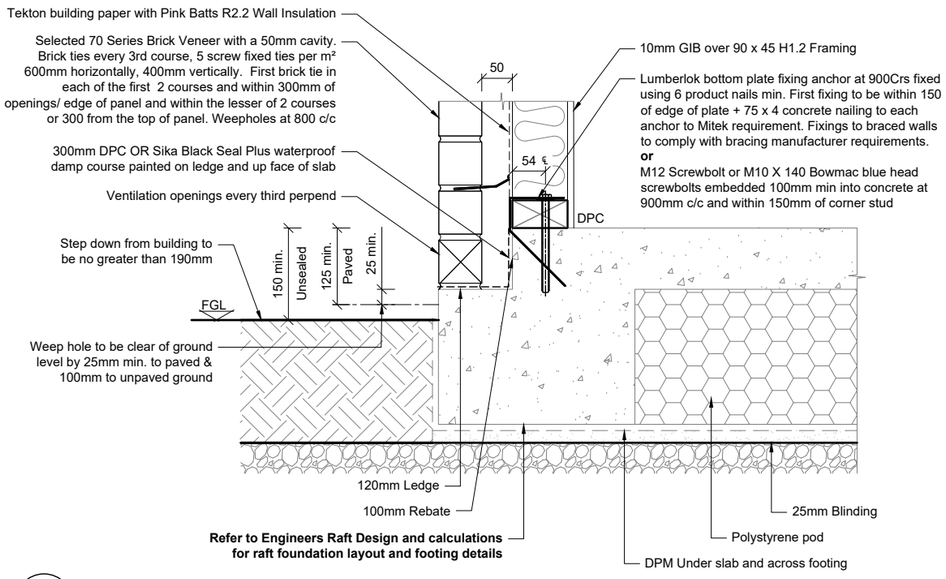

D01 A03 Brick Veneer to Foundation Clearances Detail
SCALE = 1:10 @ A3

NOTE:

1. All work to be done in accordance with NZS 3604: 2011 and the NZ Building Code unless specifically designed.
2. Refer to NZS3604:2011 Section 4 for durability requirements.
3. Do not scale from drawings.
4. Flashing materials must be selected based on environmental exposure, refer to NZS 3604 and Table 20 of NZBC clause E2/AS1.
5. Building underlay must comply with acceptable solution NZBC clause E2/AS1 and NZS 3604.
6. Sill support bars conforming to BRANZ evaluation method EM6 to be installed to all windows.
7. Flashing tape must have proven compatibility with the selected building underlay and other materials with which it comes into contact as per Table 21 of NZBC clause E2/AS1.
8. As per NZBC 9.1.10.8: Install windows & doors using pairs of min 75x3.15 jolt head nails through reveals into surrounding frame at
   a) 450mm max c/c along sills, jambs & heads
   b) 150mm max from ends of reveal Install packers between reveals & framing at all fixing points, except between head reveals & lintels.
9. All window and door openings to be checked on site prior to manufacture, any discrepancies to be reported to GJ Gardner Homes Ltd.
5. All window joinery to comply with NZS 4211:2008
6. All glazing to comply with NZS 4223
7. All window and door openings to be checked on site prior to manufacture, any discrepancies to be reported to the Designer.
8. Details to be read in conjunction with manufacturers installation instruction.
9. Cladding to be installed to manufacturers installation instructions.
10. Brick veneer fixed in accordance with to E2/AS1 Section 9.2
11. Brick Veneer with a 50mm cavity with brick ties every 3rd course, 5 screw fixed ties per m² 600mm horizontally, 400mm vertically. Weepholes @ 800mm c/c max
12. Brick ties to leave corrosion protection to comply with NZBC E2/AS1 table 18C
13. Brick veneer ties & spacings to comply with E2/AS1 table 18 A, 18 B & 18C

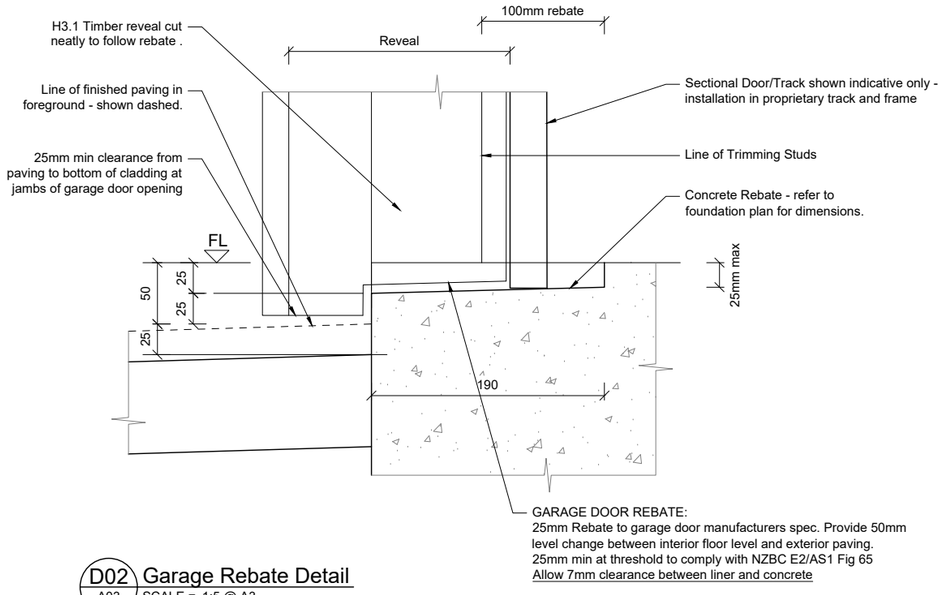

D02 A03 Garage Rebate Detail
SCALE = 1:5 @ A3

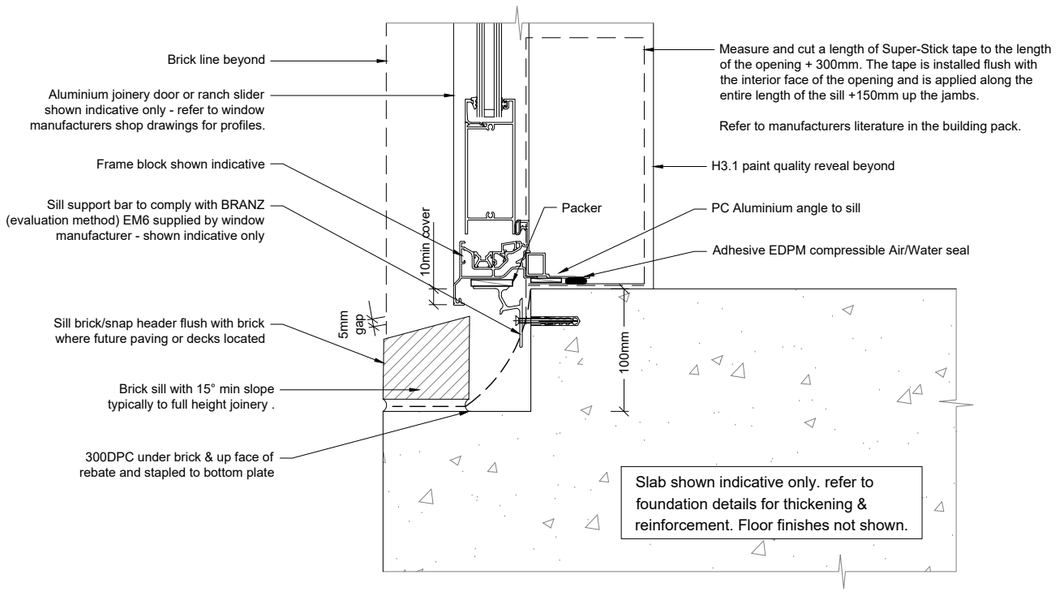

D03 A03 Brick Veneer - Non Rebated Door Sill
SCALE = 1:5 @ A3

Do not seal between flange and sill

Verify all dimensions on site before commencing work & do not scale from drawings. Refer any discrepancies to O'Brien Design Consulting Ltd.

All work to be done in accordance with NZS 3604: 2011 and the NZ Building Code unless specifically designed.

This document and the copyright in this document remain the property of O'Brien Design Consulting Ltd.

G.J. Gardner. HOMES
"We're Great Together"
FAR NORTH
Ph: (09) 407 3441
Fax: (09) 407 3442

Project Title
Kelly Hampson & Jason Farac
1 Te Uru Lane,
Kerikeri
Lot 5 DP 596768

Sheet Title
Threshold Details

Drawn 26 June 2025

Project No 5306

Rev BC-I-2

Sheet A11

Scale (A3 Original) 1: 5

0.05 0.03 0 0.05 0.1 m

LINTEL FIXING OPTIONS

LUMBERLOK

TYPE F
4.0kN

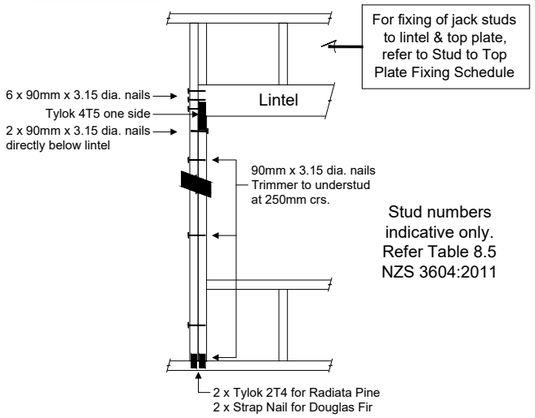

TYPE G
7.5kN

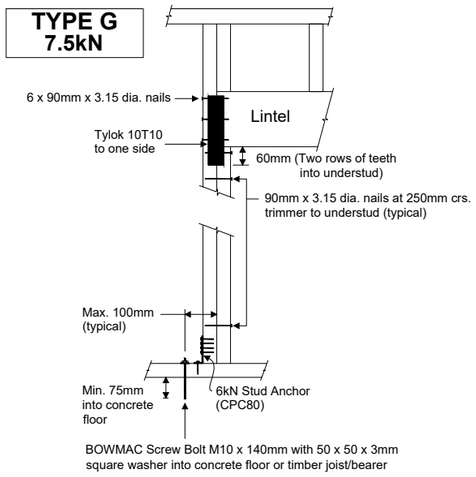

TYPE H
13.5kN

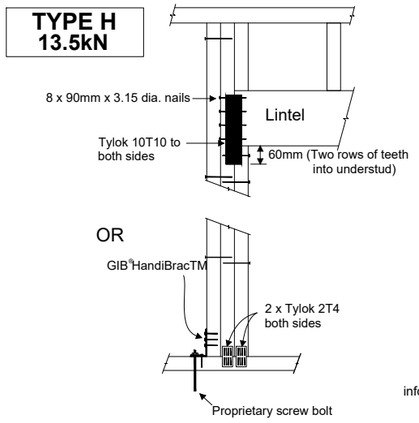

D15 - Lintel Fixing Details
SCALE = NTS

TOP PLATE CONNECTION OPTIONS:
Choose from the three connections below or refer to manufacturers information in specifications for Bowmac Stud-lok fixing

FIXING TYPE B: 4.7KN — CHOOSE ANY OF THE 3 OPTIONS BELOW

2 x 90mm x 3.15 dia. plain steel wire nails driven vertically into stud.

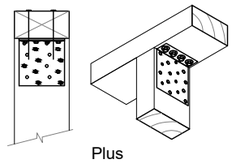

Plus
LUMBERLOK
6kN Stud Anchor
(CPC80)

2 x 90mm x 3.15 dia. plain steel wire nails driven vertically into stud.

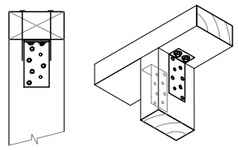

Plus
2 x LUMBERLOK
CPC40

2 x 90mm x 3.15 dia. plain steel wire nails driven vertically into stud.

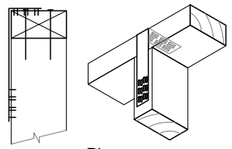

Plus
LUMBERLOK
Stud Strap
(one face only)

Recommended for internal wall options to avoid lining issues

NOTE:

To calculate the number of B type fixings required, divide the wall length by the stud centres, add 1 to this figure and locate this number of fixings as evenly as possible along the wall length. This figure includes the start and end studs in each wall length.

FIXINGS

Exposure zone: C
Durability of fixings to comply with NZS 3604:2011 Section 4 & NZBC B2/AS1

Exposed fixings to be type 304 stainless steel.

Sheltered fixings to be hot-dipped galvanize.

Closed in nail plates in roof space to be continuous coated galvanized steel.

Closed wire dogs and bolts to be hot dipped galvanized steel.

All other closed structural fixings to be mild steel (uncoated non galvanized)

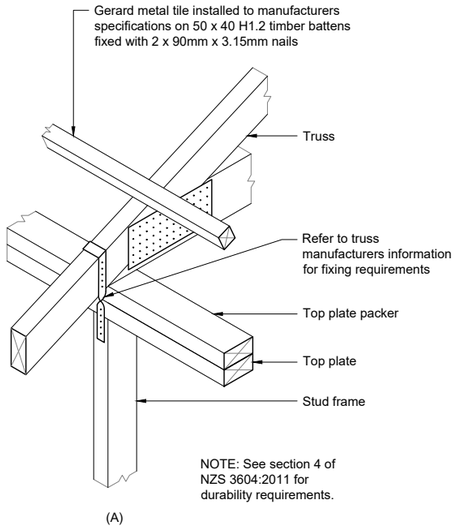

(A)

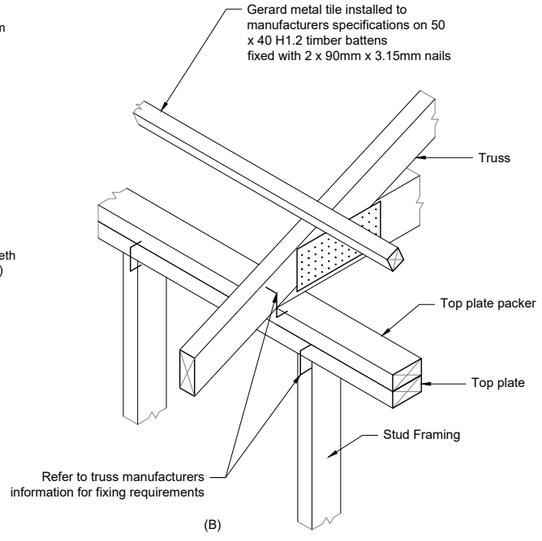

(B)

D16 - Truss Top Plate Connection
SCALE = NTS

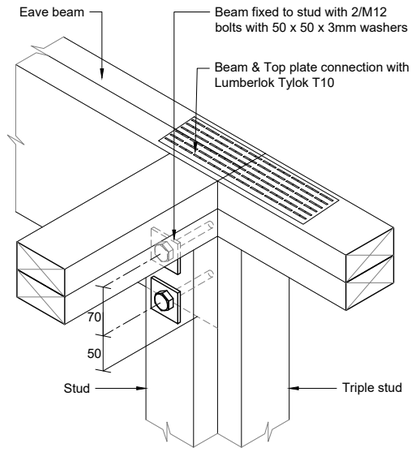

D17 A07 Beam to Corner Stud Detail
SCALE = 1:10 @ A3

NOTE:

1. All work to be done in accordance with NZS 3604: 2011 and the NZ Building Code unless specifically designed.
2. Refer to NZS3604:2011 Section 4 for durability requirements.
3. Do not scale from drawings.
4. All wall framing typically H1.2 treated unless specifically stated.
5. Designers connection details to be followed unless specifically design by precut manufacturer.
6. Refer to Eave detail for stud, lintel and soffit framing heights.
7. Precut manufacturer to provide truss fixings and Producer Statement.
8. Refer to Framing & Lintel Plan for lintel to stud fixings.

Verify all dimensions on site before commencing work & do not scale from drawings. Refer any discrepancies to O'Brien Design Consulting Ltd.

All work to be done in accordance with NZS 3604: 2011 and the NZ Building Code unless specifically designed.

This document and the copyright in this document remain the property of O'Brien Design Consulting Ltd.

G.J. Gardner. HOMES
"We're Great Together"
FAR NORTH
Ph: (09) 407 3441
Fax: (09) 407 3442

Project Title
Kelly Hampson & Jason Farac
1 Te Uru Lane,
Kerikeri
Lot 5 DP 596768

Sheet Title
Hold Down Details

Drawn 26 June 2025

Project No 5306

Rev BC-I-2

Sheet A12

Scale (A3 Original) 1: 10

0.1 0.05 0 0.1 0.2 m

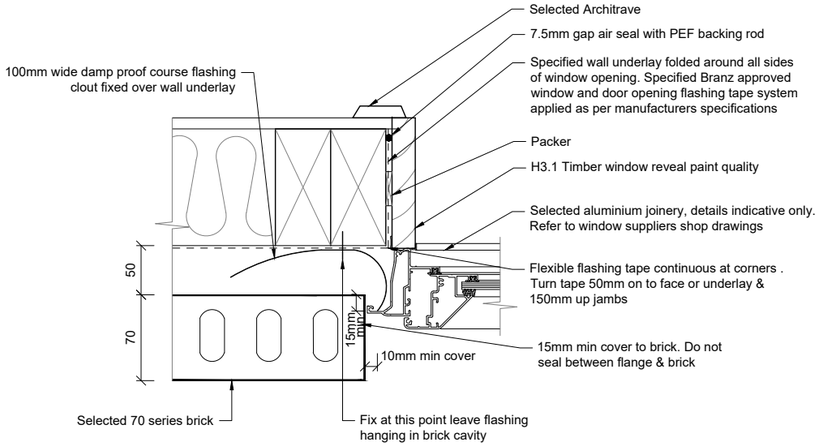

D31 / A03 Brick Veneer - Window Jamb Detail

SCALE = 1:5 @ A3

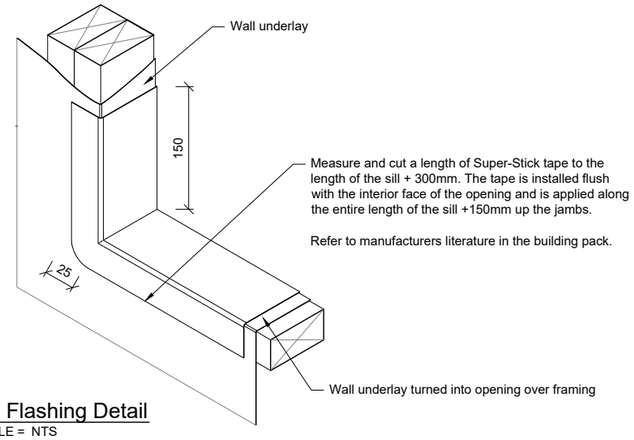

D32 / - Sill Flashing Detail

SCALE = NTS

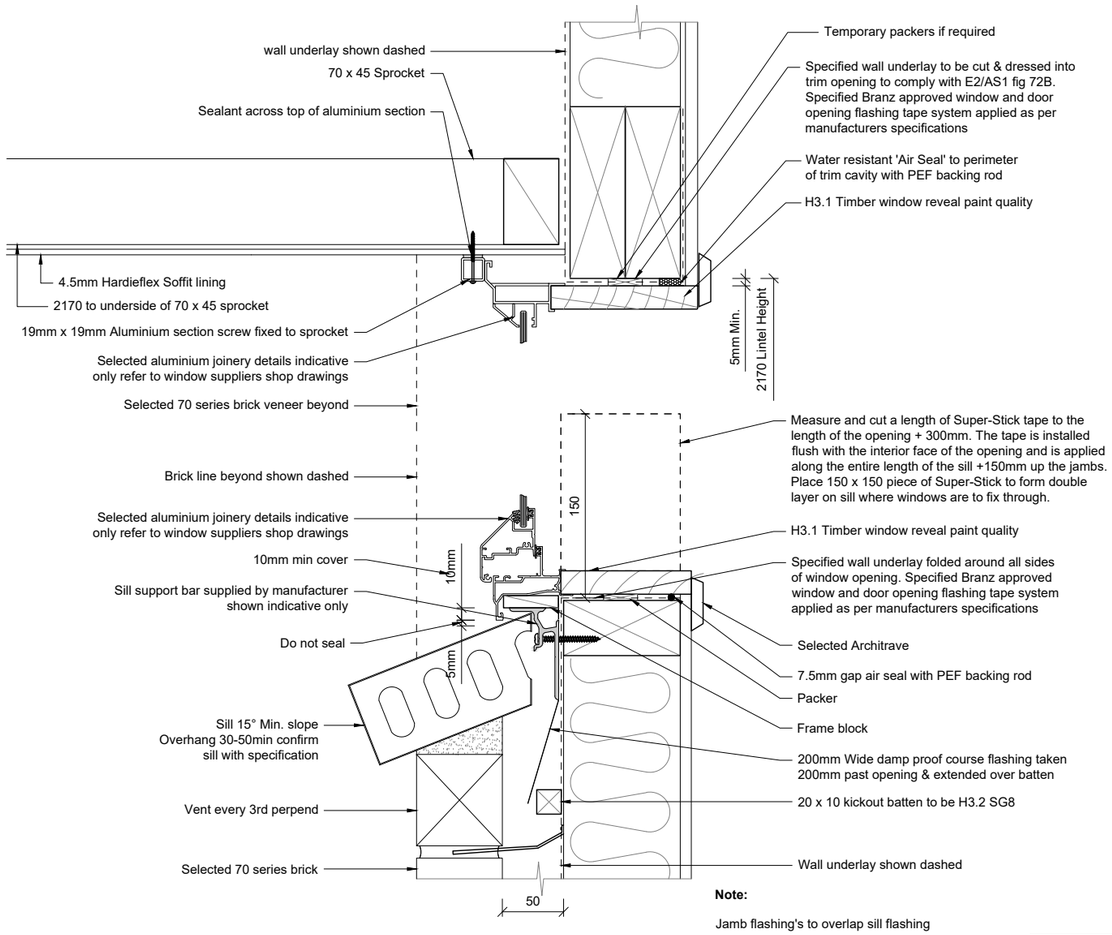

Note:

Jamb flashing's to overlap sill flashing

D34 / A03 Brick Veneer - Sill & Head Detail

SCALE = 1:5 @ A3

NOTE:

1. All work to be done in accordance with NZS 3604: 2011 and the NZ Building Code unless specifically designed.
2. Refer to NZS3604:2011 Section 4 for durability requirements.
3. Flashing materials must be selected based on environmental exposure, refer to NZS 3604 and Table 20 of NZBC clause E2/AS1.
4. Building underlay must comply with acceptable solution NZBC clause E2/AS1 and NZS 3604.
5. Sill support bars conforming to BRANZ evaluation method EM6 to be installed to all windows.
6. Flashing tape must have proven compatibility with the selected building underlay and other materials with which it comes into contact as per Table 21 of NZBC clause E2/AS1.
7. As per NZBC 9.1.10.8: Install windows & doors using pairs of min 75x3.15 jolt head nails through reveals into surrounding frame at
   a) 450mm max c/c along sills, jambs & heads
   b) 150mm max from ends of reveal Install packers between reveals & framing at all fixing points, except between head reveals & lintels.
8. All window and door openings to be checked on site prior to manufacture, any discrepancies to be reported to GJ Gardner Homes Ltd.
5. All window joinery to comply with NZS 4211:2008
6. All glazing to comply with NZS 4223
7. All window and door openings to be checked on site prior to manufacture, any discrepancies to be reported to the Designer.
8. Details to be read in conjunction with manufacturers installation instruction.
9. Cladding to be installed to manufacturers installation instructions.
10. Brick veneer fixed in accordance with to E2/AS1 Section 9.2
11. Brick Veneer with a 50mm cavity with brick ties every 3rd course, 5 screw fixed ties per m² 600mm horizontally, 400mm vertically. Weepholes @ 800mm c/c max
12. Brick ties to leave corrosion protection to comply with NZBC E2/AS1 table 18C
13. Brick veneer ties & spacings to comply with E2/AS1 table 18 A, 18 B & 18C

Note:

Wall underlay & flexible flashing tape to be continuous at corners

First ties in each of the first 2 courses and within 300 of openings/ edge of panel and within the lesser of 2 courses or 300mm of top of panel

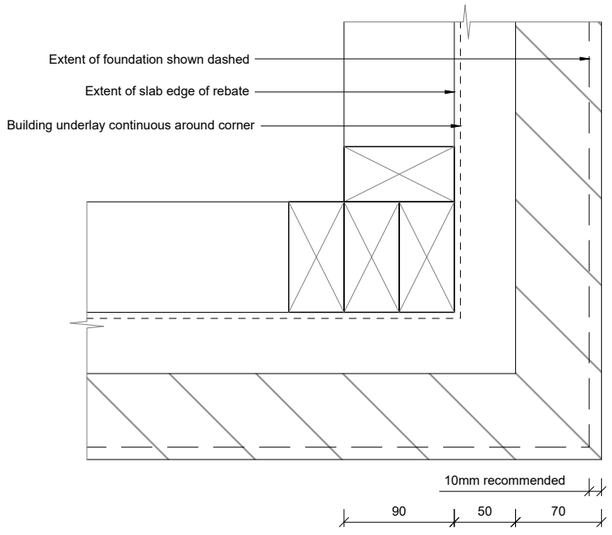

D33 / A03 Edge of Slab Layout Detail

SCALE = 1:5 @ A3

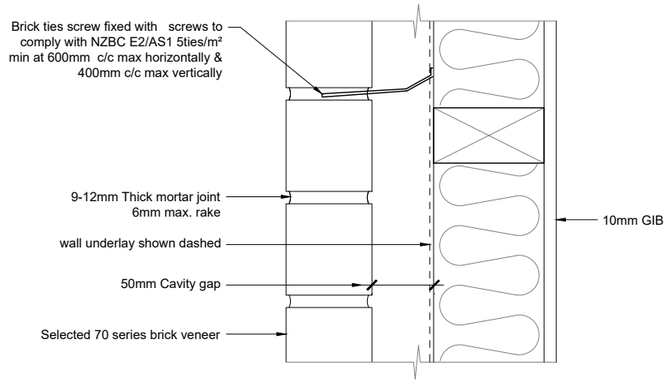

D35 / - Brick Veneer - Wall Detail

SCALE = 1:5 @ A3

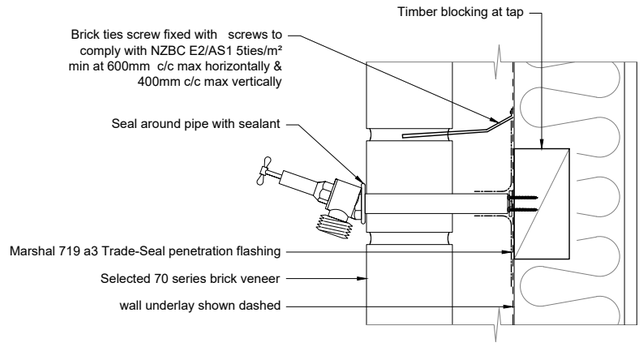

D36 / - Brick Veneer - Wall Penetration Detail

SCALE = 1:5 @ A3

Verify all dimensions on site before commencing work & do not scale from drawings. Refer any discrepancies to O'Brien Design Consulting Ltd.

All work to be done in accordance with NZS 3604: 2011 and the NZ Building Code unless specifically designed.

This document and the copyright in this document remain the property of O'Brien Design Consulting Ltd.

G.J. Gardner. HOMES
"We're Great Together"
FAR NORTH
Ph: (09) 407 3441
Fax: (09) 407 3442

Project Title

Kelly Hampson & Jason Farac
1 Te Uru Lane,
Kerikeri
Lot 5 DP 596768

Sheet Title

Cladding Details

Drawn 26 June 2025

Project No 5306

Rev BC-I-2

Sheet A13

Scale (A3 Original) 1: 5

0.05 0.03 0 0.05 0.1 m

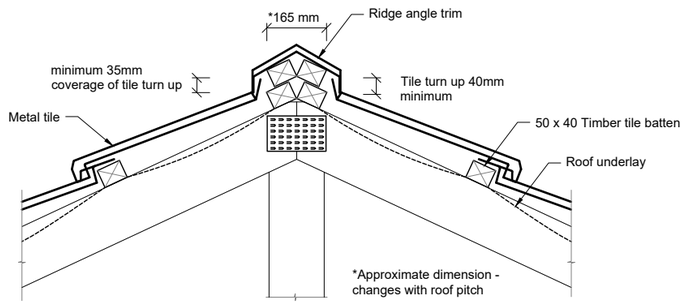

D81 A07 Ridge Flashing Detail
SCALE = 1:10 @ A3

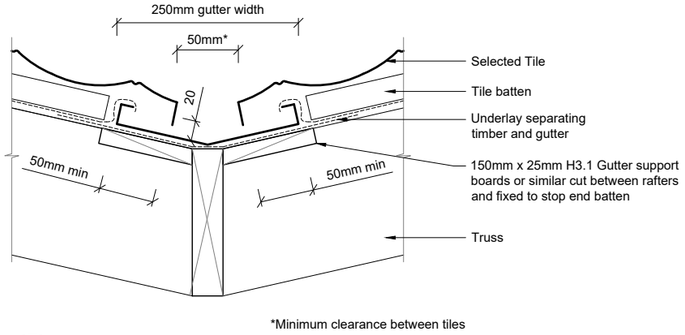

D82 A07 Gutter Valley Detail
SCALE = 1:10 @ A3

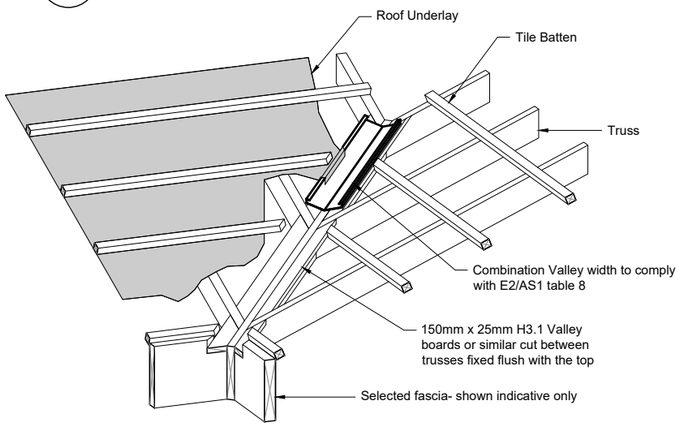

D83 - Gutter Valley Flashing Detail
SCALE = NTS

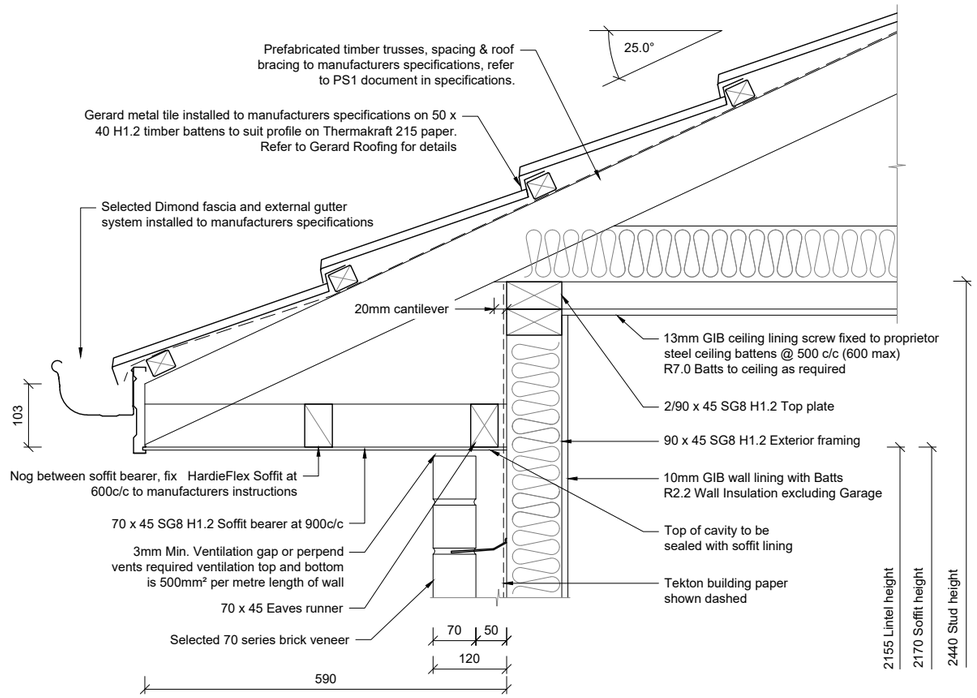

D85 A07 Brick Veneer - 590mm Eave Detail
SCALE = 1:10 @ A3

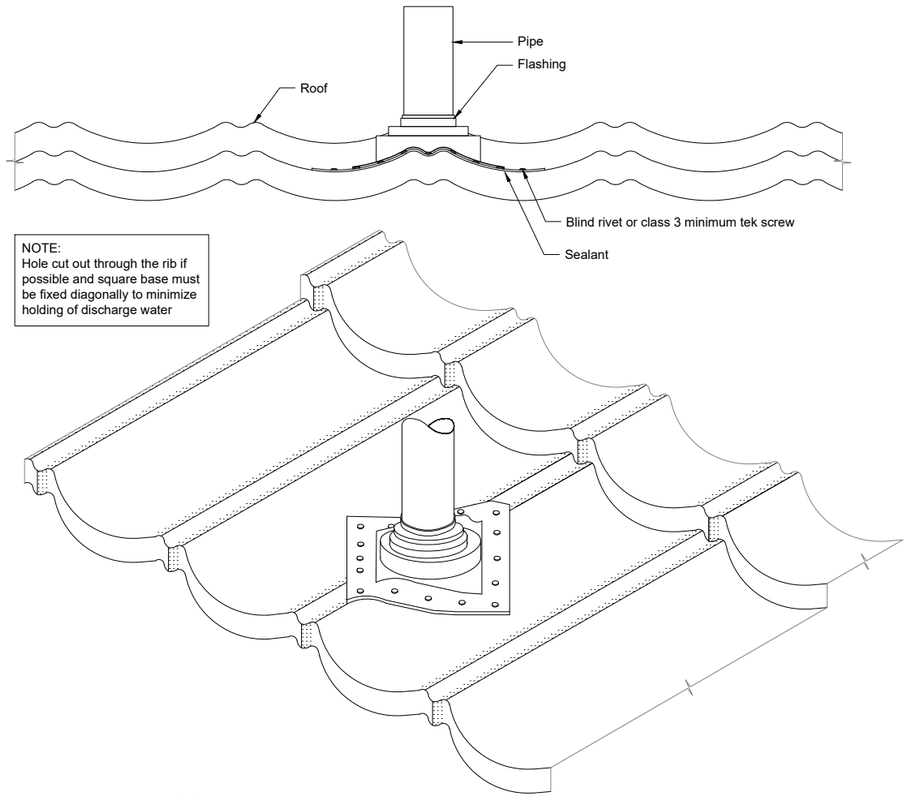

D86 A07 Vent Flashing Detail
SCALE = 1:10 @ A3

NOTE:

1. Refer to Section for specific product selection.
2. All work to be done in accordance with NZS 3604: 2011 and the NZ Building Code unless specifically designed.
3. Refer to NZS3604:2011 Section 4 for durability requirements.
4. Do not scale from drawings.
5. All wall framing typically H1.2 treated unless specifically stated.
6. Designers connection details to be followed unless specifically design by precut manufacturer.
7. Refer to Eave detail for stud, lintel and soffit framing heights.
8. Precut manufacturer to provide truss fixings and Producer Statement.
9. Refer to Framing & Lintel Plan for lintel to stud fixings.
10. Details to be read in conjunction with manufacturers specifications and installation requirements.

FIXINGS

Exposure zone: C
Durability of fixings to comply with NZS 3604:2011 Section 4 & NZBC B2/AS1

Exposed fixings to be type 304 stainless steel.
Sheltered fixings to be hot-dipped galvanize.
Closed in nail plates in roof space to be continuous coated galvanized steel.
Closed wire dogs and bolts to be hot dipped galvanized steel.
All other closed structural fixings to be mild steel (uncoated non galvanized)

Verify all dimensions on site before commencing work & do not scale from drawings. Refer any discrepancies to O'Brien Design Consulting Ltd.

All work to be done in accordance with NZS 3604: 2011 and the NZ Building Code unless specifically designed.

This document and the copyright in this document remain the property of O'Brien Design Consulting Ltd.

G.J. Gardner. HOMES
"We're Great Together"
FAR NORTH
Ph: (09) 407 3441
Fax: (09) 407 3442

Project Title
Kelly Hampson & Jason Farac
1 Te Uru Lane,
Kerikeri
Lot 5 DP 596768

Sheet Title
Roof Details

Drawn 26 June 2025

Project No 5306

Rev BC-I-2

Sheet A14

Scale (A3 Original) 1: 10

0.1 0.05 0 0.1 0.2 m

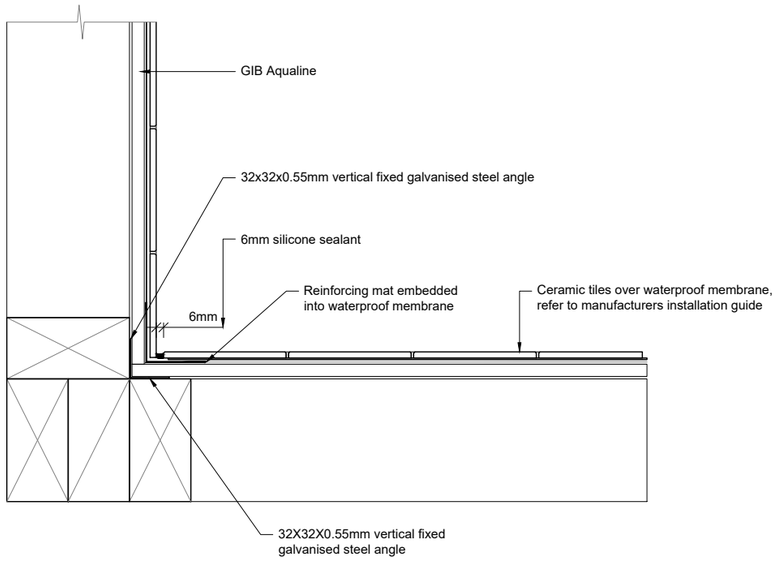

D90 Shower Wall Detail (Plan View)
SCALE = 1:5 @ A3

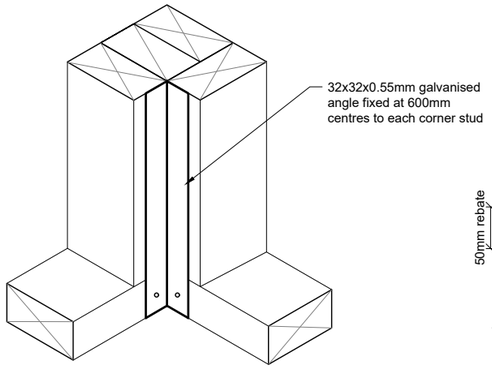

D91 Wet Area Tiled Walls and Base
SCALE = NTS

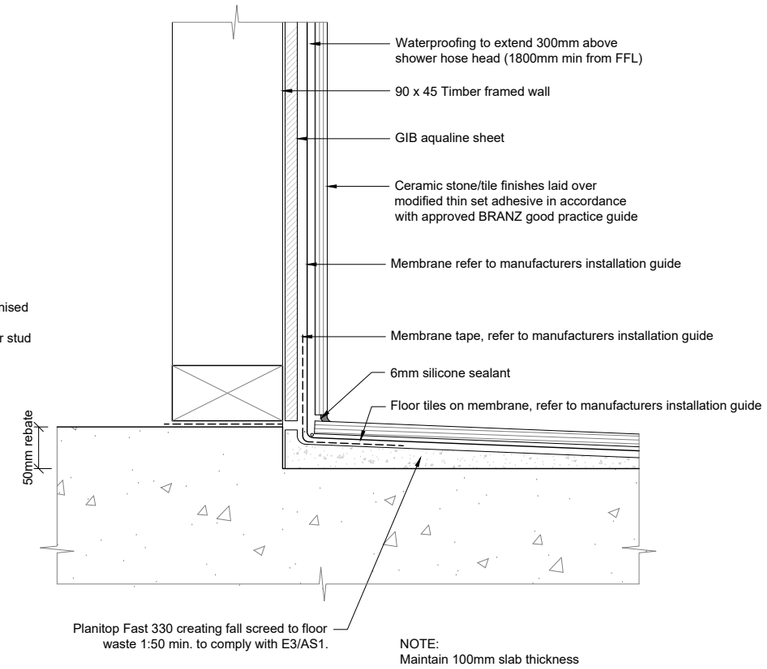

D92 Tiled Shower Tray Detail
SCALE = 1:5 @ A3

NOTE:

1. All work to be done in accordance with NZS 3604: 2011 and the NZ Building Code unless specifically designed.
2. All construction materials fixings & fastenings to comply with NZS 3604:2011 Section 4 & NZBC B2.
3. Plumbing to be installed by resigtered Plumber.
4. Refer to Gib aqualine Wet Area Systems for manufacturers installation required for GIB lining to typical fixtures & installations.
5. Tiled showers to have membrane applied under tiling.
6. All wet areas to be provided with impervious linings as per NZBC E3/AS1.
7. Builder to refer to fixture manufacturers requirements for framing /nogging required for installations of all fixtures & fixings.
8. "Watersplash" Areas to E3/ AS1

- Seal around all penetrations and at junctions of wall/floor tiles with approved mould resistant silicone sealant.
- Watersplash areas & surfaces adjacent to sanitary & laundering facilities to be impervious to compl.y with NZBC E3.
- Kitchen bench/ work surfaces 3.0 to comply with G3/ AS1.
- Membrane used behind all sealant joints.

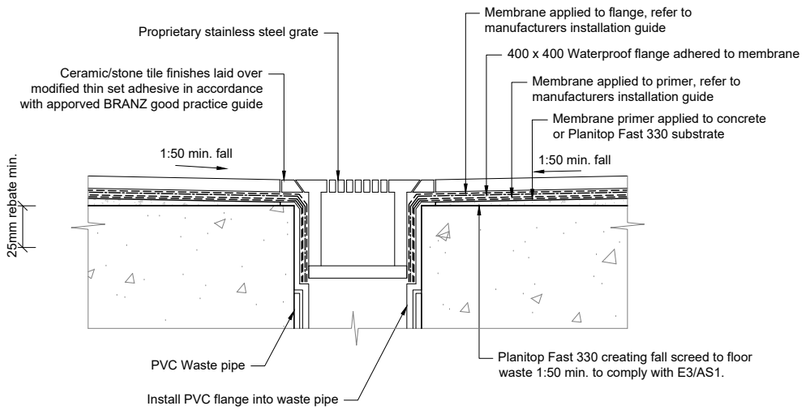

NOTE:
Maintain 100mm slab thickness

D93 Internal Wet Area Waste Detail
SCALE = 1:5 @ A3

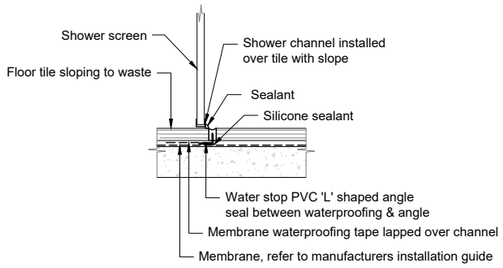

D94 Section Channel Detail
SCALE = 1:5 @ A3

Note:

Where impact noise from pipes is an issue, fix all pipes on resilient brackets.

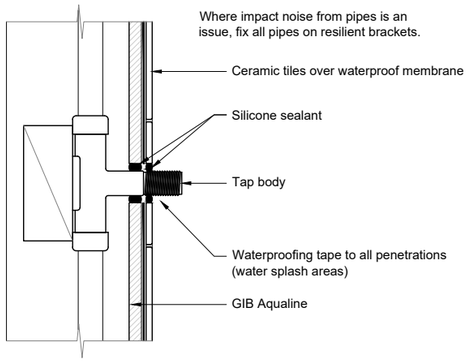

D95 Tile Penetration Detail
SCALE = 1:5 @ A3

Tiles to be installed in accordance with BRANZ Good Practice Guide

Verify all dimensions on site before commencing work & do not scale from drawings. Refer any discrepancies to O'Brien Design Consulting Ltd.

All work to be done in accordance with NZS 3604: 2011 and the NZ Building Code unless specifically designed.

This document and the copyright in this document remain the property of O'Brien Design Consulting Ltd.

G.J. Gardner. HOMES
"We're Great Together"
FAR NORTH
Ph: (09) 407 3441
Fax: (09) 407 3442

Project Title
Kelly Hampson & Jason Farac
1 Te Uru Lane,
Kerikeri
Lot 5 DP 596768

Sheet Title
Membrane Details

Drawn 26 June 2025

Project No 5306

Rev BC-I-2

Sheet A15

Scale (A3 Original) 1: 5

0.05 0.03 0 0.05 0.1 m

Note:

Where impact noise from pipes is an issue, fix all pipes on resilient brackets.

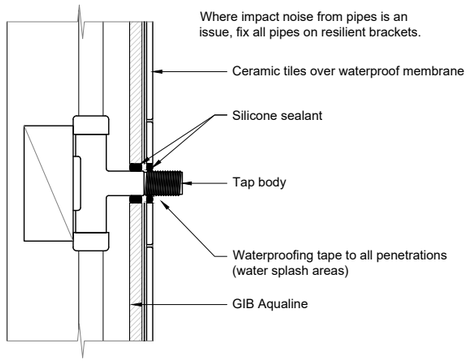

D96 Tile Penetration Detail
SCALE = 1:5 @ A3

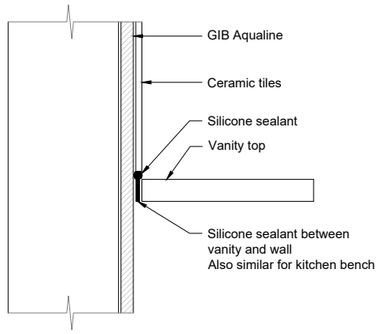

D97 Tile Upstand Detail
SCALE = 1:5 @ A3

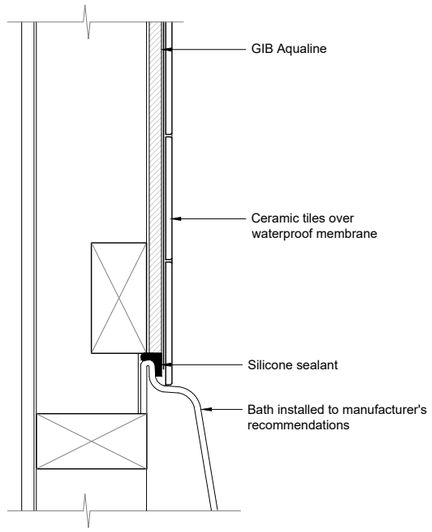

D98 Bath Tray Wall Detail
SCALE = 1:5 @ A3

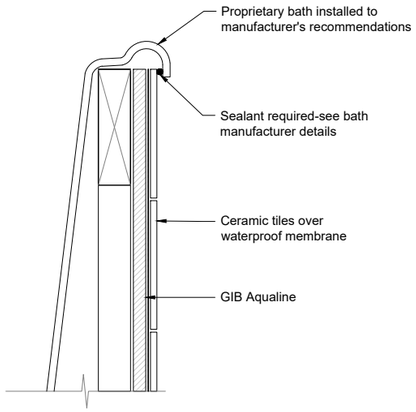

D99 Bath Tray Wall Detail
SCALE = 1:5 @ A3

NOTE:

1. All work to be done in accordance with NZS 3604: 2011 and the NZ Building Code unless specifically designed.
2. All construction materials fixings & fastenings to comply with NZS 3604:2011 Section 4 & NZBC B2.
3. Plumbing to be installed by resigtered Plumber.
4. Refer to Gib aqualine Wet Area Systems for manufacturers installation required for GIB lining to typical fixtures & installations.
5. Tiled showers to have membrane applied under tiling.
6. All wet areas to be provided with impervious linings as per NZBC E3/AS1.
7. Builder to refer to fixture manufacturers requirements for framing /nogging required for installations of all fixtures & fixings.
8. "Watersplash" Areas to E3/ AS1

- Seal around all penetrations and at junctions of wall/floor tiles with approved mould resistant silicone sealant.
- Watersplash areas & surfaces adjacent to sanitary & laundering facilities to be impervious to compl.y with NZBC E3.
- Kitchen bench/ work surfaces 3.0 to comply with G3/ AS1.
- Membrane used behind all sealant joints.

Tiles to be installed in accordance with BRANZ Good Practice Guide

Verify all dimensions on site before commencing work & do not scale from drawings. Refer any discrepancies to O'Brien Design Consulting Ltd.

All work to be done in accordance with NZS 3604: 2011 and the NZ Building Code unless specifically designed.

This document and the copyright in this document remain the property of O'Brien Design Consulting Ltd.

G.J. Gardner. HOMES
"We're Great Together"

FAR NORTH
Ph: (09) 407 3441
Fax: (09) 407 3442

Project Title
Kelly Hampson & Jason Farac
1 Te Uru Lane,
Kerikeri
Lot 5 DP 596768

Sheet Title
Membrane Details

Drawn 26 June 2025

Project No 5306

Rev BC-I-2

Sheet A16

Scale (A3 Original) 1: 5

0.05 0.03 0 0.05 0.1 m

Figure 7: **Bedding and backfilling**
Paragraphs 5.2.1, 5.3.1 and 5.4.1

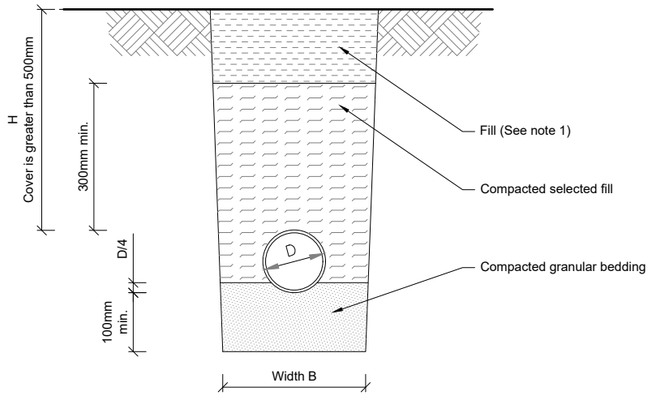

(a) Bedding type 'B' of NZS 7643
Cover greater than 500mm

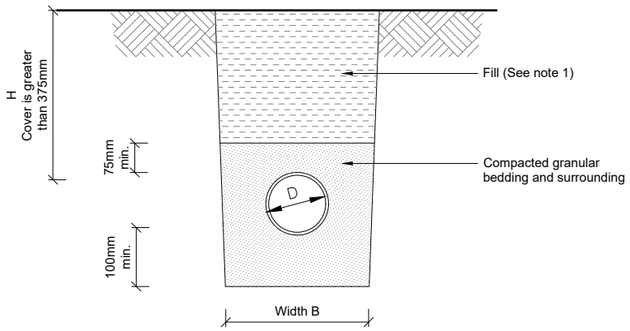

(b) Bedding type 'D' of NZS 7643
Cover greater than 375mm

NOTE:
Fill shall be:
Ordinary fill where drains are located below gardens and open country.
Compacted selected fill where the drains are located below residential driveways and similar areas subject to light traffic.

Figure 9: **Inspection points**
Paragraph 5.7.3

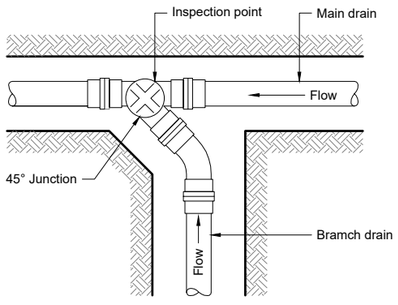

101 - Trench & Inspection Joint Details
SCALE = NTS

Figure 8: **Relationship of pipe trench to building foundation**
Paragraph 5.6.1

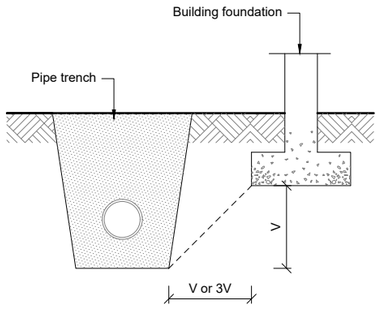

Minimum horizontal separation shall be V or 3V depending on length of time trench open, see paragraph 5.6.1

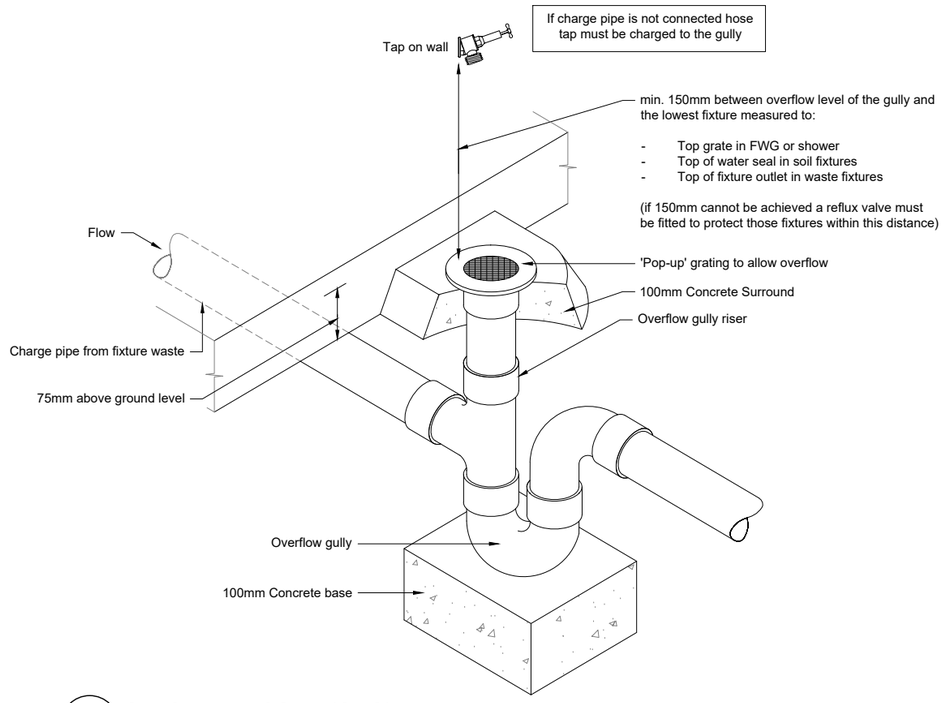

102 - Overflow Relief Gully (ORG) Detail
SCALE = NTS

NOTE:

1. All drainage is diagrammatical, drainlayer to determine on site drainage layout and provide asbuilt plan when complete.
2. Number of downpipes required as per NZBC E1/AS1 1 x 74mmØ downpipe per 70m² roof plan area.
3. Stormwater: 100mm Ø UPVC pipe, minimum gradient 1:120.
4. All drainage to comply with AS/NZS 3500 & NZBC G13/AS1.

Verify all dimensions on site before commencing work & do not scale from drawings. Refer any discrepancies to O'Brien Design Consulting Ltd.

All work to be done in accordance with NZS 3604: 2011 and the NZ Building Code unless specifically designed.

This document and the copyright in this document remain the property of O'Brien Design Consulting Ltd.

G.J. Gardner. HOMES
"We're Great Together"
FAR NORTH
Ph: (09) 407 3441
Fax: (09) 407 3442

Project Title
Kelly Hampson & Jason Farac
1 Te Uru Lane,
Kerikeri
Lot 5 DP 596768

Sheet Title
Drainage Details

Drawn 26 June 2025

Project No 5306

Rev BC-I-2

Sheet A17

Scale (A3 Original) 1: 10

0.1 0.05 0 0.1 0.2 m

Figure 16: Tempering Valve Installation
Paragraph 6.14.2 a)

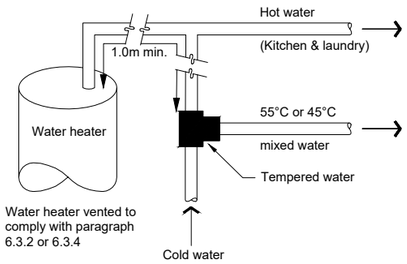

(a) With untempered water to laundry and kitchen fixtures and appliances

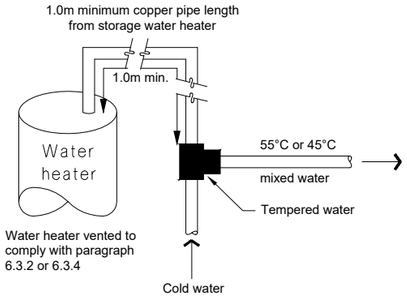

(b) Where all hot water is tempered

1. For optimum system efficiency the tempering valve, for other than a mains pressure system, may be located as low as practicable to achieve the manufacturer's recommended head, at the tempering valve.
2. 1.0m minimum copper pipe length from storage water heater.

105 - Tempering Valve Installation
SCALE = NTS

Figure 8: Mains Pressure Storage Water Heater System (unvented)
Paragraphs 6.1.2 and 6.2.1 b)

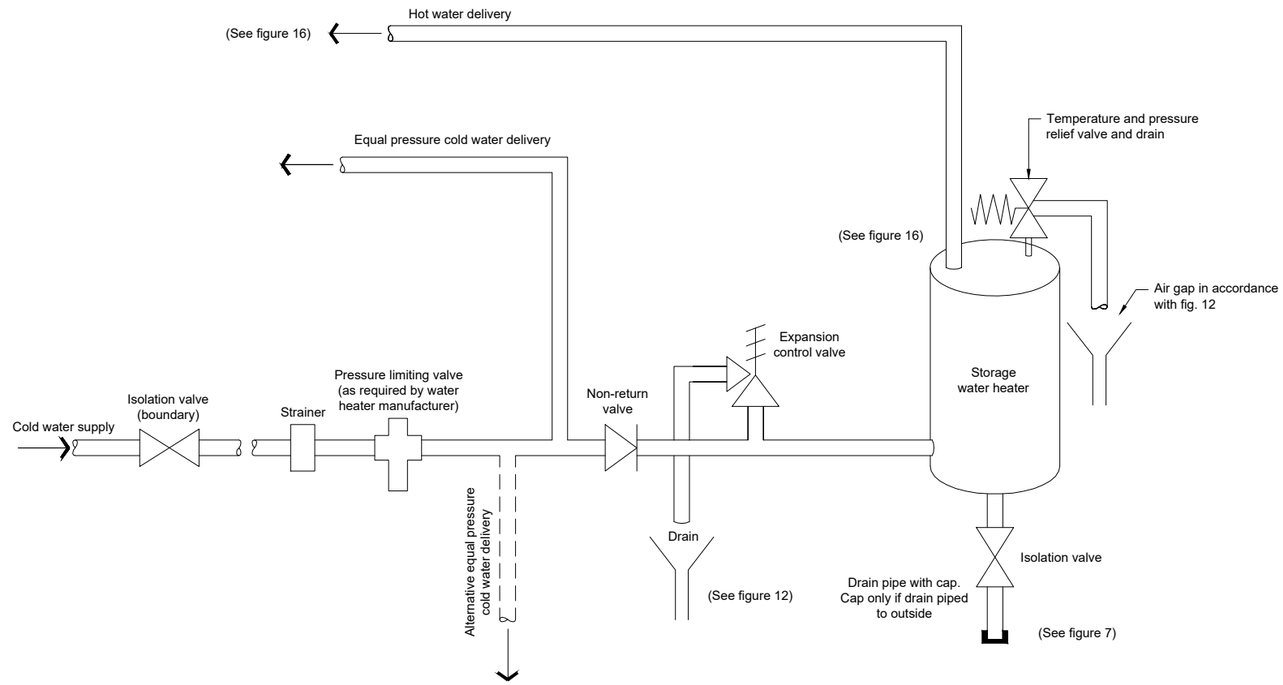

106 - Hotwater Cylinder Schematic
SCALE = 1:10 @ A3

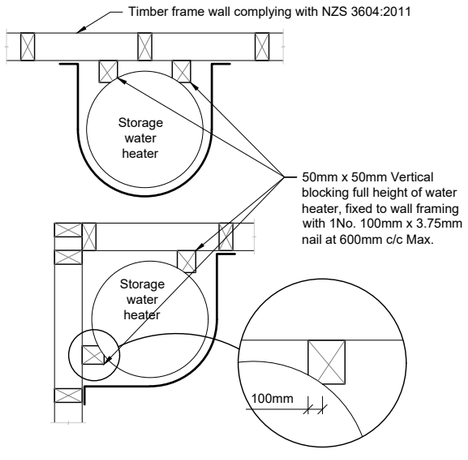

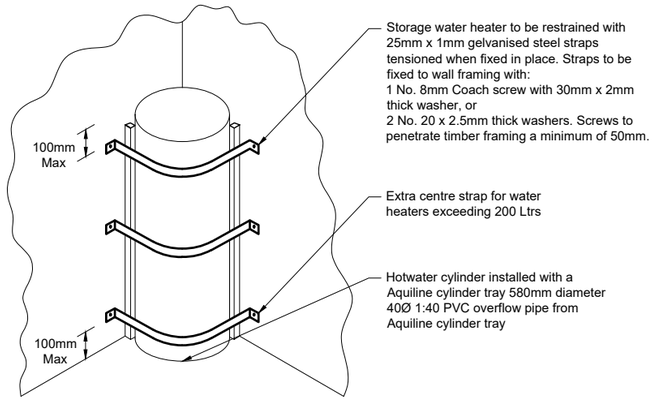

107 - Seismic Restraint of Storage Water Heaters 90 - 360 Litre's
SCALE = 1:10 @ A3

NOTE:

1. All drainage is diagrammatical, drainlayer to determine on site drainage layout and provide asbuilt plan when complete.
2. Number of downpipes required as per NZBC E1/AS1 1 x 74mmØ downpipe per 70m² roof plan area.
3. Stormwater: 100mm Ø UPVC pipe, minimum gradient 1:120.
4. All drainage to comply with AS/NZS 3500 & NZBC G13/AS1.
5. Provide seismic restraints & temperature valve to hot water cylinder as per NZBC G12/AS1. Refer to separate sheet for details.

Verify all dimensions on site before commencing work & do not scale from drawings. Refer any discrepancies to O'Brien Design Consulting Ltd.

All work to be done in accordance with NZS 3604: 2011 and the NZ Building Code unless specifically designed.

This document and the copyright in this document remain the property of O'Brien Design Consulting Ltd.

G.J. Gardner. HOMES
"We're Great Together"
FAR NORTH
Ph: (09) 407 3441
Fax: (09) 407 3442

Project Title
Kelly Hampson & Jason Farac
1 Te Uru Lane,
Kerikeri
Lot 5 DP 596768

Sheet Title
Seismic Restraint Details

Drawn 26 June 2025

Project No 5306

Rev BC-I-2

Sheet A18

Scale (A3 Original) 1: 10

0.1 0.05 0 0.1 0.2 m

GENERAL

1. Do not scale from drawings. These drawings are to be read in conjunction with the architectural drawings and all other related documents. Refer to architectural drawings for dimensions, rebates & recesses.

2. Contact the architect/engineer if any discrepancies are found.

3. Under no circumstances shall polystyrene spacers be used.

4. DPM shall be in accordance with NZS3604 (polyethylene sheet, min. 0.25mm). Do not use multiple layers. All penetrations through the DPM shall be sealed.

5. A layer of sand blinding or granular fines (GAP7) shall be placed, screeded and compacted over the building platform. The maximum thickness of this layer shall be no more than 50mm.

6. Polystyrene pods shall be 1100 x 1100 x 220mm.

7. Edge beams and/or thickenings may be wider than shown (as necessary to accommodate off-cuts/wastage etc.). Add an additional HD12 in the bottom for every 100mm of additional concrete width.

CONCRETE

1. All concrete work and materials shall conform to NZS3109 and applicable building consent authority regulations.

2. Cuts shall be made to the floor where shown on the drawings.

3. If desired, additional supplementary sawcuts no deeper than 15mm may be placed at 5m bays (or 3m bays for polished or exposed concrete floor, see point 4). Each bay length to width ratio shall be limited to 1.5:1.

4. Where concrete polishing are made to the floor, the floor thickness shall be increased such that the final topping depth is no less than that specified on the plans after all polishing. Highly recommended for supplementary sawcuts on polished or exposed concrete to be placed in 3m bays to reduce cracking, locations TBC by architect/ agent. Highly recommended to engage concrete specialist for advice on concrete placement, curing, and polishing, in order to achieve desirable finish with minimal cracking.

5. Where underfloor heating is installed, floor topping shall be increased to 110mm. Close attention and careful planning shall be taken to ensure no damage to underfloor heating (e.g. layout avoiding load bearing wall, sawcuts, etc.).

6. Unless otherwise noted, concrete shall be:

Raftfloor: Raftmix 25MPa minimum
Other concrete: 20MPa minimum or 25MPa minimum within 'exposure zone D' (if in doubt, confirm with local BCA)

REINFORCEMENT

1. Unless otherwise specified, all reinforcement shall be Ductility Class E, in accordance with NZS 4671.

2. All bend diameters shall comply with NZS 3109. Re-bending of reinforcement is not permitted. 'Spot' welding of reinforcement is not permitted.

3. All mesh reinforcement shall be Ductility Class E as per NZS4671

4. Unless otherwise specified by proprietary product specifications, mesh shall be lapped a minimum of 250mm or by a grid plus 50mm, whichever is greater.

5. Unless otherwise specified on plans, minimum covers are:
   exposed to earth: 75mm
   exposed to edge: 50mm
   protected by damp proofing: 50mm

6. Unless otherwise specified, reinforcement laps are:

Reinforcement Grade	Nomination	min. lap when less than 300mm of concrete below steel	min. lap when more than 300mm of concrete below steel	concrete strength (MPa)
300	'D'	40Ø or min. 600mm (whichever is greater)	52Ø or min. 600mm (whichever is greater)	all blockfill, 20 and 25
500	'HD'	70Ø	91Ø	all blockfill
500	'HD'	56Ø	73Ø	20
500	'HD'	50Ø	65Ø	25

*Note: for lap of vertical bars, use values for "when less than 300mm of concrete below steel"

SITE CONDITIONS

1. Design based on soils report/assessment
By: Wilton Joubert Ltd Ref: #140490 Dated: 28-05-2025
Specifically: Design based on all unsuitable material removed (to approximate depth of 0.25m to 0.3m) and uniform class 'M' expansive soils across building platform with a minimum ultimate bearing capacity of 300kPa, subject to engineer's confirmation.

2. In the absence of any other recommendation, a minimum of 100mm of compacted engineered hardfill layer extended min. 1000mm beyond the building footprint (or as per notes 3 & 4 below) shall be placed under the slab to level the site and provide a durable working surface for temporary works.

3. Building platform, where filled above natural Existing Ground Level (EGL), shall be extended min. 1000mm beyond the building footprint. Fill shall be placed and compacted in accordance to NZS 4431:1989. Fill exceeding 600mm deep above EGL shall be reviewed by author of geotechnical report or suitably qualified geotechnical engineer.

4. Where compacted fill (to replace excavated material) is required to form building platform, the excavation and backfill shall be extended past the building edge by at least the same depth that is being excavated or 1000mm, whichever is greater. Backfill shall be placed and compacted in accordance to NZS 4431:1989.

5. Confirm position & depth of all public pipes and position & height of all retaining walls on the site, prior to any works. If different to the site plan then Wilton Joubert Ltd. shall be contacted.

6. Building foundation shall be outside of 45° influence line from the bottom of any public pipes, unless otherwise allowed for and shown in WJL Foundation Plan.

7. Building foundation shall be outside of 1V:1.5H influence line from the bottom of any retaining wall, unless otherwise allowed for and shown in WJL Foundation Plan.

8. Building foundation shall be outside of 1V:1.5H influence line from the bottom of any private underground tank and pumps, unless otherwise allowed for and shown in WJL Foundation Plan.

9. Any excavation done for private drainage trenches MUST be backfilled and recompacted strictly as per NZBC Acceptable Solution G13/AS2.

INSPECTIONS

1. Check the BUILDING CONSENT CONDITIONS for any inspections that are required by the Building Consent Authority (BCA).

2. It is increasingly common for building consent authorities to require a "PS4" for specifically designed structures. For Wilton Joubert Ltd. to issue this, we need to carry out inspections as per the building consent requirements. Ring Wilton Joubert Ltd. local office to arrange a booking.
NO INSPECTION EQUALS NO PS4 ISSUED.

3. Recommended Inspections:

- Site cut to suitable subgrade *(This shall be carried out by Wilton Joubert Ltd.)*.

- Compaction and depth of fill *(This shall be carried out by Wilton Joubert Ltd.)*.

- Concrete pre-pour of foundations (& any other structural elements).

It is the building consent applicant's (or authorised agent) responsibility to ensure that Wilton Joubert Ltd. is notified in advance of the required inspection. We cannot issue PS4 for items we did not inspect. Bookings should be made 48 hours prior to the desired time of inspection. The following are required at the time of booking:

- Building consent number MUST be provided at time of booking.

- Building consent documentation and consent conditions MAY be requested for review prior to inspection, particularly for geotechnical inspection requests where geotechnical report was written by others.

- Building consent documentation and consent conditions MUST be available on site for inspection.

- Do not scale from Drawings.
- All structural drawings are to be read in conjunction with architectural and all other relevant documentation. Any discrepancies shall be notified prior to any construction or fabrication.
- Prior to any works, the position & depth of all public pipes on the site shall be confirmed by authorized/qualified personnel. If different to the plans provided, Wilton Joubert Ltd. shall be contacted for possible redesigns.

No.	DESCRIPTION	DATE

REVISION

WILTON JOUBERT
Consulting Engineers
Northland: 09 945 4188 Christchurch: 021 824 063
Auckland: 09 527 0196 Southern Lakes: 03 443 6209
www.wiltonjoubert.co.nz

SITE ADDRESS:

Proposed Residence:
Lot 5,
1 Te Uru Lane,
Kerikeri

SHEET TITLE:

Cover Page

DESIGNED BY: MFC	DRAWN BY: MH
CHECKED BY: DL	CHECKED BY: MH
DATE: 10-6-2025	OFFICE: Lunn Ave
DRAWING SCALE: 1:100	ORIGINAL DRAWING SIZE: A3
Original Job #: **Job # 140693**	Sheet #: **S0.1**
Revision Job #:	

COPYRIGHT - WILTON JOUBERT LIMITED

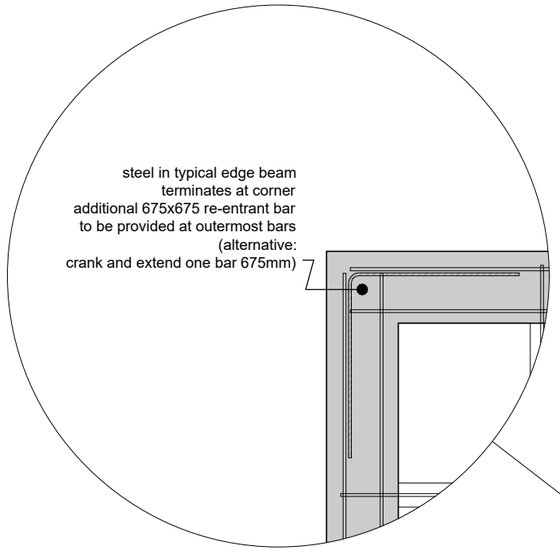

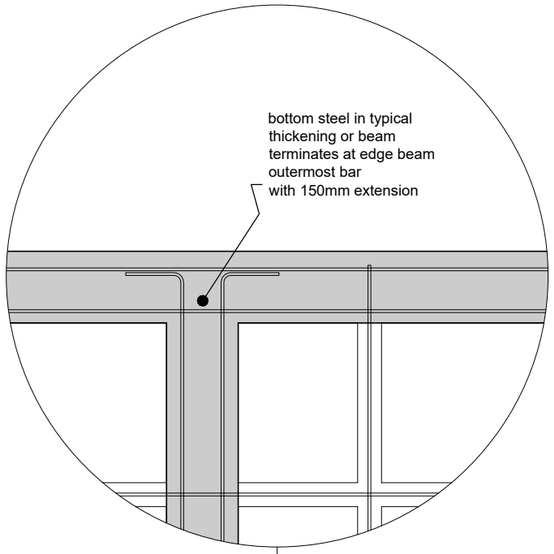

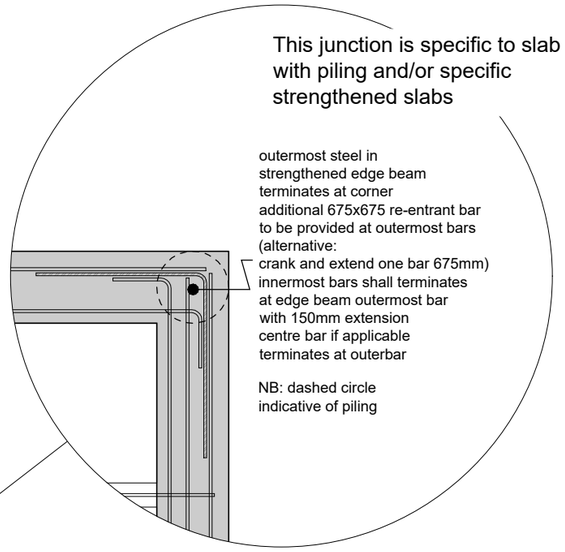

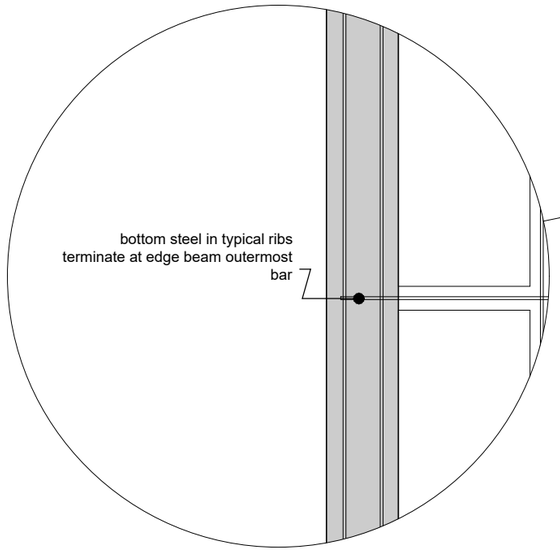

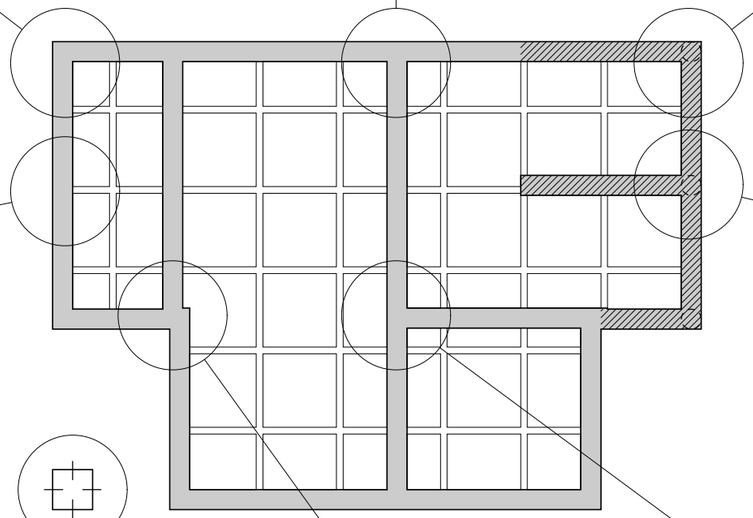

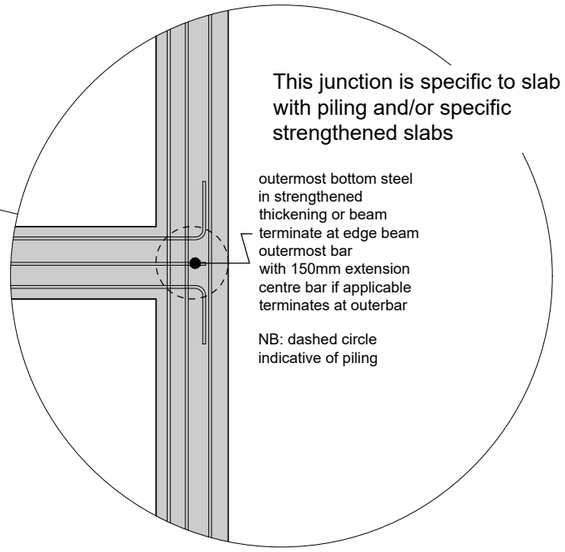

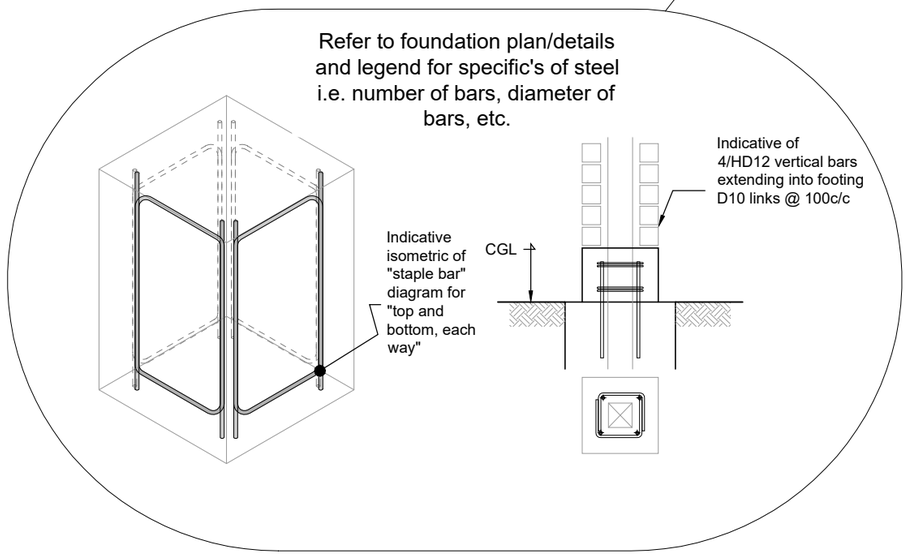

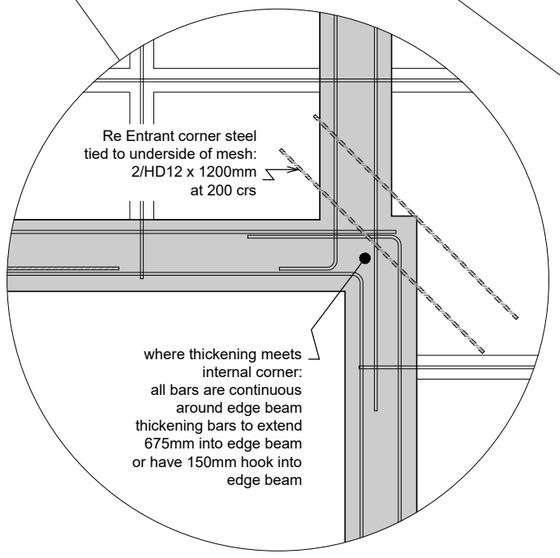

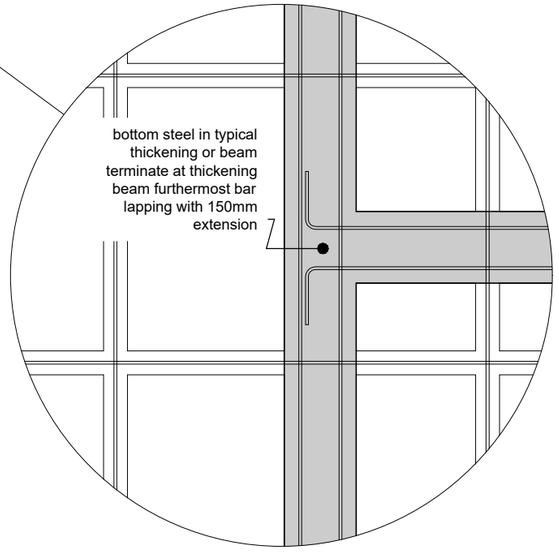

- Do not scale from Drawings.
- All structural drawings are to be read in conjunction with architectural and all other relevant documentation. Any discrepancies shall be notified prior to any construction or fabrication.
- Prior to any works, the position & depth of all public pipes on the site shall be confirmed by authorized/qualified personnel. If different to the plans provided, Wilton Joubert Ltd. shall be contacted for possible redesigns.

No.	DESCRIPTION	DATE

REVISION

WILTON JOUBERT
Consulting Engineers
Northland: 09 945 4188 Christchurch: 021 824 063
Auckland: 09 527 0196 Southern Lakes: 03 443 6209
www.wiltonjoubert.co.nz

SITE ADDRESS:

Proposed Residence:
Lot 5,
1 Te Uru Lane,
Kerikeri

SHEET TITLE:

Typical Steel Detailing

DESIGNED BY: MFC	DRAWN BY: MH
CHECKED BY: DL	CHECKED BY: MH
DATE: 10-6-2025	OFFICE: Lunn Ave
DRAWING SCALE: 1:100 & 1:25	ORIGINAL DRAWING SIZE: A3
Original Job #: **Job # 140693**	Sheet #: **S0.2**
Revision Job #:	

COPYRIGHT - WILTON JOUBERT LIMITED

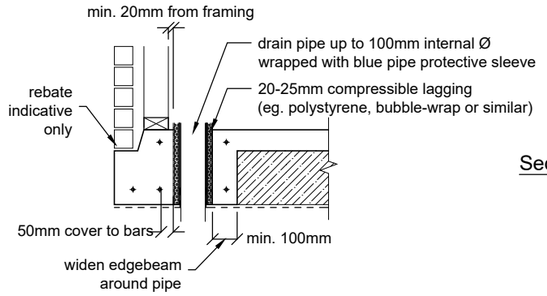

Section View: At Edge

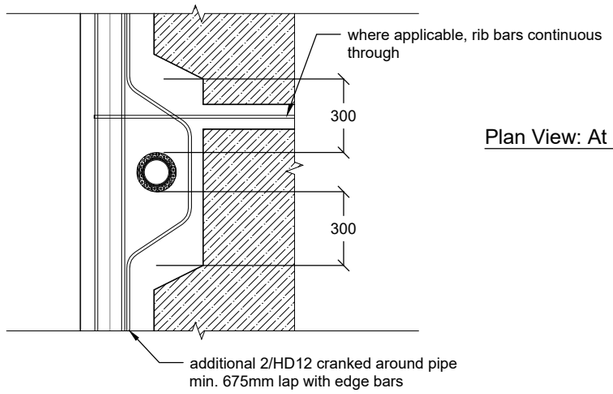

Plan View: At Edge

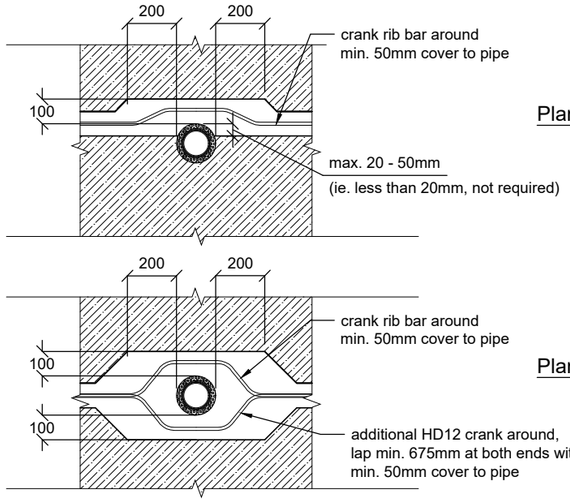

Plan View: At Rib Edge

Plan View: Within Rib

Typical Detail Around Pipes

Raftfloor Internal Ribs

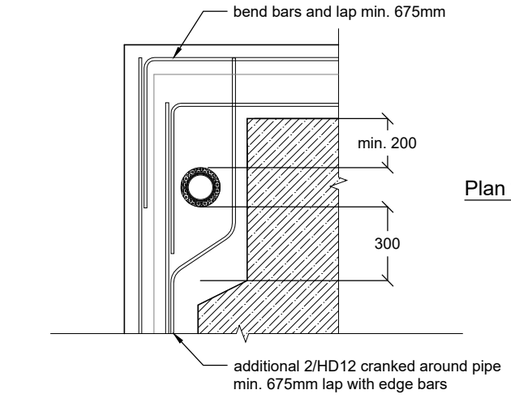

Plan View: At Open Corner

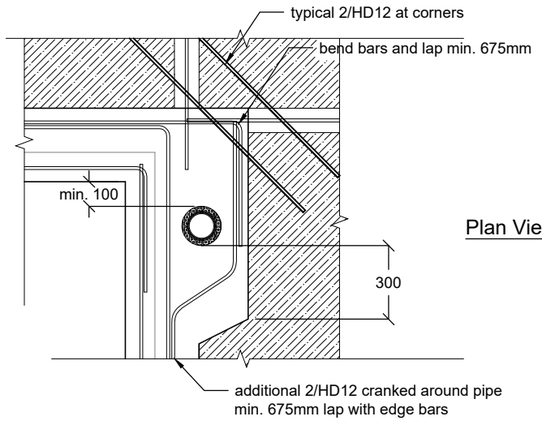

Plan View: At Closed Corner

Typical Detail Around Pipes

Raftfloor Edge Beam

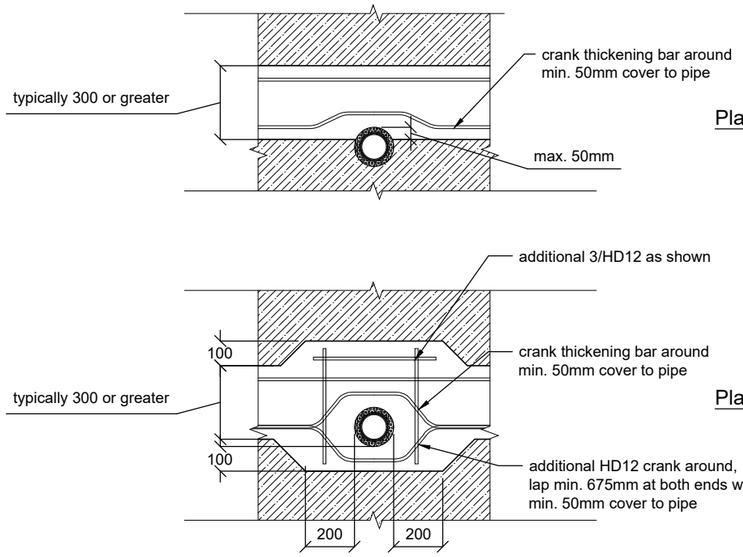

Plan View: At Thickening Edge

Plan View: Within Thickening

Typical Detail Around Pipes

Raftfloor Internal Thickenings

NOTES:

These details are applicable where plumbing/services are conveyed underground.
Services are to be taken through polystyrene pods as much as possible. If this is unavoidable, it may be taken through ribs/thickenings, provided the details (or similar in principle) on this sheet are used.

All service trench backfill shall be properly compacted.

Member sizes and reinforcing shown are indicative only, details shown on raftslab plan & details shall take precedence over the details shown here.

- Do not scale from Drawings.
- All structural drawings are to be read in conjunction with architectural and all other relevant documentation. Any discrepancies shall be notified prior to any construction or fabrication.
- Prior to any works, the position & depth of all public pipes on the site shall be confirmed by authorized/qualified personnel. If different to the plans provided, Wilton Joubert Ltd. shall be contacted for possible redesigns.

No.	DESCRIPTION	DATE

REVISION

WILTON JOUBERT
Consulting Engineers
Northland: 09 945 4188 Christchurch: 021 824 063
Auckland: 09 527 0196 Southern Lakes: 03 443 6209
www.wiltonjoubert.co.nz

SITE ADDRESS:

Proposed Residence:
Lot 5,
1 Te Uru Lane,
Kerikeri

SHEET TITLE:

Typical Pipe Penetration Details

DESIGNED BY:	MFC	DRAWN BY:	MH
CHECKED BY:	DL	CHECKED BY:	MH
DATE:	10-6-2025	OFFICE:	Lunn Ave
DRAWING SCALE:	1:100 & 1:25	ORIGINAL DRAWING SIZE:	A3
Original Job #:	**Job # 140693**	Sheet #:	**S0.3**
Revision Job #:			

COPYRIGHT - WILTON JOUBERT LIMITED

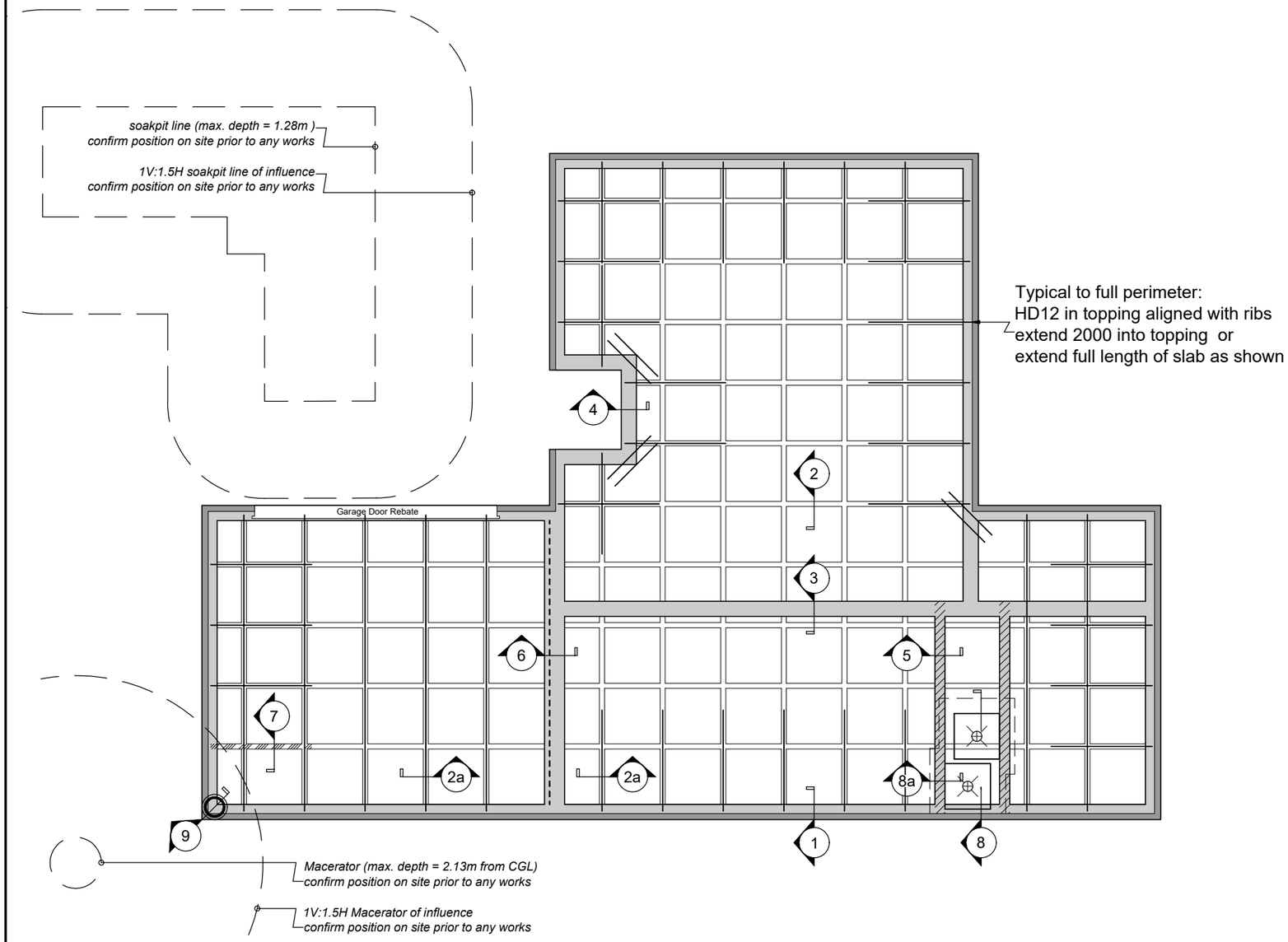

Raft Floor Plan

Scale 1:100

Legend:

Re Entrant corner steel
2/HD12 x 1200mm
at 200 crs

6mm sawcut
25mm deep do not
cut into edge beam

Shower setdown:
pods within area of shower + 300mm
are cut down by 50mm max
so as to maintain 85mm topping
HD12 trim around top.
Steel in ribs, thickenings and
edge beams continuous through

500Ø Bored concrete pile
2/HD12 vertical
set 1.3m below slab or
taken below influence line,
whichever is deeper

- Do not scale from Drawings.
- All structural drawings are to be read in conjunction with architectural and all other relevant documentation. Any discrepancies shall be notified prior to any construction or fabrication.
- Prior to any works, the position & depth of all public pipes on the site shall be confirmed by authorized/qualified personnel. If different to the plans provided, Wilton Joubert Ltd. shall be contacted for possible redesigns.

No.	DESCRIPTION	DATE

REVISION

WILTON JOUBERT
Consulting Engineers
Northland: 09 945 4188 Christchurch: 021 824 063
Auckland: 09 527 0196 Southern Lakes: 03 443 6209
www.wiltonjoubert.co.nz

SITE ADDRESS:

Proposed Residence:
Lot 5,
1 Te Uru Lane,
Kerikeri

SHEET TITLE:

Raftfloor Plan

DESIGNED BY: MFC	DRAWN BY: MH
CHECKED BY: DL	CHECKED BY: MH
DATE: 10-6-2025	OFFICE: Lunn Ave
DRAWING SCALE: 1:100	ORIGINAL DRAWING SIZE: A3
Original Job #: **Job # 140693**	Sheet #: **S1.1**
Revision Job #:	

COPYRIGHT - WILTON JOUBERT LIMITED

NOTE: Allow for top steel as may be shown on plan. Steel that crosses below sawcuts shall be tied to underside of mesh

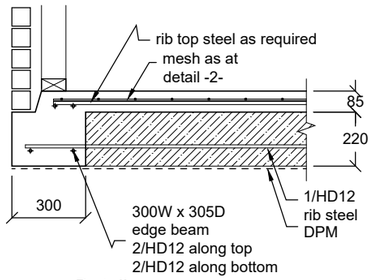

1 Detail

Raftfloor Edge Beam - 300
Scale 1:25

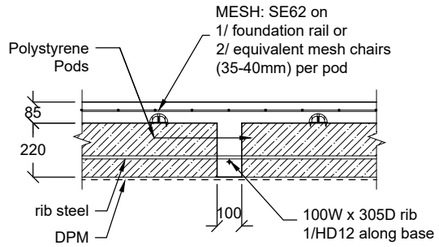

2 Detail

Raftfloor Internal Rib - 100
Scale 1:25

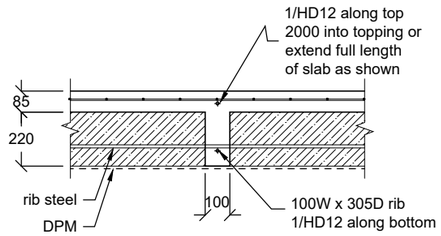

2a Detail

Raftfloor Internal Rib - 100
Scale 1:25

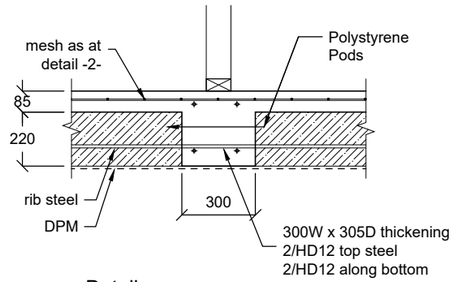

3 Detail

Raftfloor Internal Rib - 300
Scale 1:25

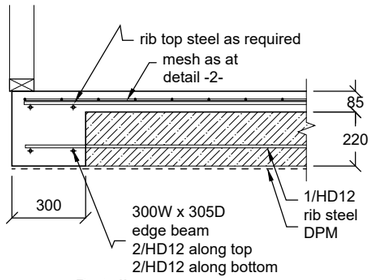

4 Detail

Raftfloor Edge Beam - 300
Scale 1:25

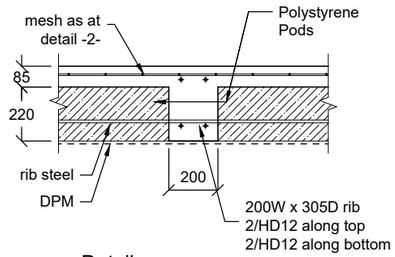

5 Detail

Raftfloor Internal Rib - 200
Scale 1:25

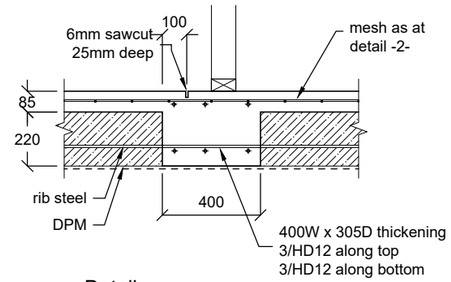

6 Detail

Raftfloor Internal Rib - 400 with Sawcut
Scale 1:25

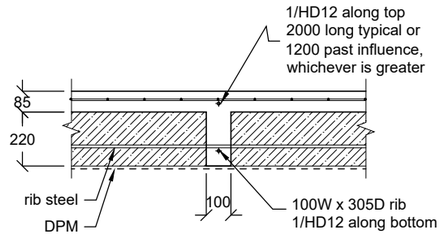

7 Detail

Raftfloor Internal Rib - 100
Scale 1:25

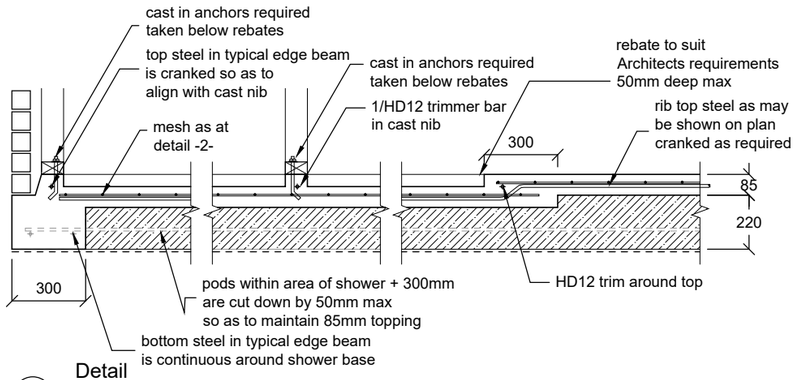

8 Detail

Raftfloor Shower Setdown at Edge Beam - 300
Scale 1:25

SHOWER NOTE:
Allow for Ribs and or
Thickenings as may be shown on plan
Any top steel of ribs crossing through recessed areas shall be cranked or lowered to maintain appropriate top cover

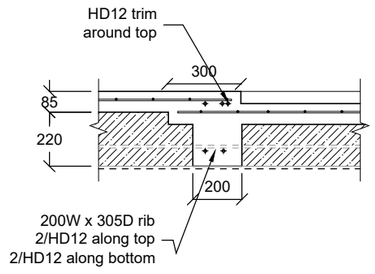

8a Detail

Raftfloor Shower Setdown at Internal Rib - 200
Scale 1:25

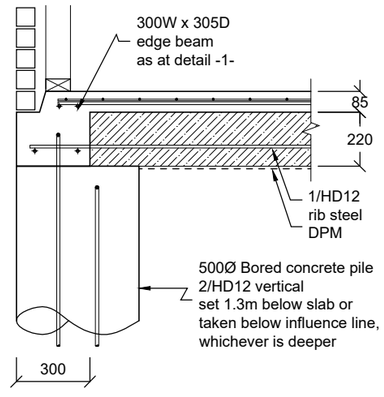

9 Detail

Raftfloor Edge Beam - 300
Scale 1:25

- Do not scale from Drawings.
- All structural drawings are to be read in conjunction with architectural and all other relevant documentation. Any discrepancies shall be notified prior to any construction or fabrication.
- Prior to any works, the position & depth of all public pipes on the site shall be confirmed by authorized/qualified personnel. If different to the plans provided, Wilton Joubert Ltd. shall be contacted for possible redesigns.

No.	DESCRIPTION	DATE

REVISION

WILTON JOUBERT
Consulting Engineers
Northland: 09 945 4188 Christchurch: 021 824 063
Auckland: 09 527 0196 Southern Lakes: 03 443 6209
www.wiltonjoubert.co.nz

SITE ADDRESS:

Proposed Residence:
Lot 5,
1 Te Uru Lane,
Kerikeri

SHEET TITLE:

Raftfloor Details

DESIGNED BY: MFC	DRAWN BY: MH
CHECKED BY: DL	CHECKED BY: MH
DATE: 10-6-2025	OFFICE: Lunn Ave
DRAWING SCALE: 1:25	ORIGINAL DRAWING SIZE: A3
Original Job #: **Job # 140693**	Sheet #: **S2.1**
Revision Job #:	

COPYRIGHT - WILTON JOUBERT LIMITED

View Instrument Details

Instrument No	12965271.5
Status	Registered
Date & Time Lodged	29 July 2024 16:43
Lodged By	Summerton, Vaughn
Instrument Type	Consent Notice under s221(4)(a) Resource Management Act 1991

Affected Records of Title	Land District
1156101	North Auckland
1156102	North Auckland
1156103	North Auckland
1156104	North Auckland
1156105	North Auckland
1156106	North Auckland
1156107	North Auckland
1156108	North Auckland
1156109	North Auckland
1156110	North Auckland
1156111	North Auckland
1156112	North Auckland
1156113	North Auckland
1156114	North Auckland
1156115	North Auckland
1156116	North Auckland
1156117	North Auckland
1156118	North Auckland
1156119	North Auckland
1156120	North Auckland
1156121	North Auckland
1156122	North Auckland
1156123	North Auckland
1156124	North Auckland

Annexure Schedule Contains 3 Pages.

Signature

Signed by Vaughn Summerton as Territorial Authority Representative on 29/07/2024 03:51 PM

***** End of Report *****

Te Kaunihera o Te Hiku o te Ika
Far North District Council

HE ARA TĀMATA
CREATING GREAT PLACES
Supporting our people

Private Bag 752, Kaikohe 0440, New Zealand
ask@fnd.govt.nz
0800 920 029
fnd.govt.nz

THE RESOURCE MANAGEMENT ACT 1991

SECTION 221: CONSENT NOTICE

REGARDING **RC-2220850-RMACOM**
Being the Subdivision of Lot 1 DP 25752, Pt Lot 2 DP 86081 and Lot 1 DP 162472
North Auckland Registry

PURSUANT to Section 221 and for the purpose of Section 224 (c) (ii) of the Resource Management Act 1991, this Consent Notice is issued by the **FAR NORTH DISTRICT COUNCIL** to the effect that conditions described in the schedule below are to be complied with on a continuing basis by the subdividing owner and the subsequent owners after the deposit of the survey plan, and these are to be registered on the titles of the allotments specified below.

SCHEDULE

Lots 1-22, 30 and 33 DP 596768

(i). Prior to construction of a dwelling, the owner shall construct a vehicle crossing in accordance with Far North District Councils engineering standards. Where a crossing is proposed onto a council road, a vehicle crossing permit approval is required from the council.

(ii). Any development shall comply with the restrictions and recommendations identified in the Geotechnical Report for Proposed Subdivision prepared by Hawthorn Geddes Limited dated 28 February 2022.

(iii). At the time of lodgement of a building consent for a dwelling on the lots, the owner shall provide a design prepared by a suitably qualified professional for an on-site stormwater soakage pit capable of providing suitable soakage for rainfall events up to and included a 5 year Annual Return Interval. Overflows from the soakage pits are to be discharged via the reticulated stormwater network. Once approved, the soakage pit is to be constructed and maintained in accordance with the approved design.

Lots 2-5 DP 596768

(iv). Shall not form nor utilise any vehicle crossing access onto Kerikeri Road.

Te Kaunihera o Te Hiku o te Ika
Far North District Council

HE ARA TĀMATA
CREATING GREAT PLACES
Supporting our people

Private Bag 752, Kaikohe 0440 New Zealand
ask.us@fnd.govt.nz
0800 920 029
fnd.govt.nz

Lots 1-5 DP 596768

(v). The earth bund, fence and landscaping implemented under Condition 3. (i) in accordance with the plan prepared by Simon Cocker Landscape Architecture Limited entitled 'Landscape Mitigation Plan' dated 3rd June 2022 shall be maintained in perpetuity by the owners of Lots 1 – 5. A copy of the Plan shall be attached to this consent notice.

SIGNED: Mr Tianxu Huang- Authorised Officer
By the FAR NORTH DISTRICT COUNCIL
Under delegated authority:
TEAM LEADER – RESOURCE CONSENTS

DATED at **KERIKERI** this 25th day of July 2024

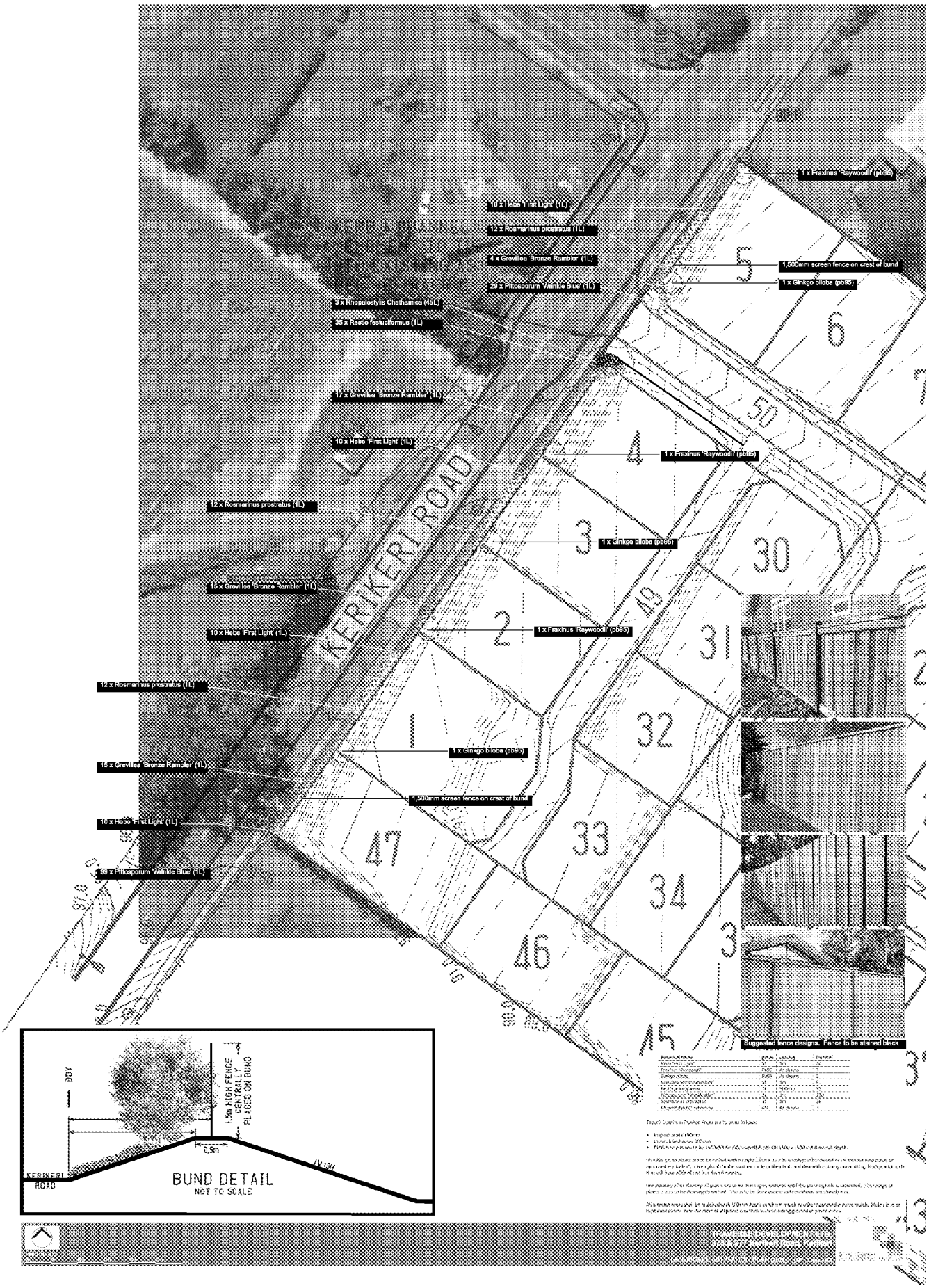
1 x Fraxinus 'Raywoodii' (pb86)
10 x Hebe 'First Light' (1L)
12 x Rosmarinus prostratus (1L)
1 x Grevillea 'Bronze Rambler' (1L)
1,500mm screen fence on crest of bund
1 x Ginkgo biloba (pb86)
3 x Kniphofia Chathamica (45L)
55 x Festuca festuciformus (1L)
KERIKERI ROAD
1 x Fraxinus 'Raywoodii' (pb86)
1 x Ginkgo biloba (pb86)
1 x Fraxinus 'Raywoodii' (pb86)
12 x Rosmarinus prostratus (1L)
1 x Ginkgo biloba (pb86)
16 x Grevillea 'Bronze Rambler' (1L)
1,500mm screen fence on crest of bund
10 x Hebe 'First Light' (1L)
99 x Pittosporum 'Wrinkle Leaf' (1L)
5
6
50
4
3
30
49
2
31
1
32
47
33
34
46
45
Suggested fence designs: Fence to be stained black
BUND DETAIL
NOT TO SCALE
1.5m HIGH FENCE CENTRALLY PLACED ON BUND
0.5m
KERIKERI ROAD